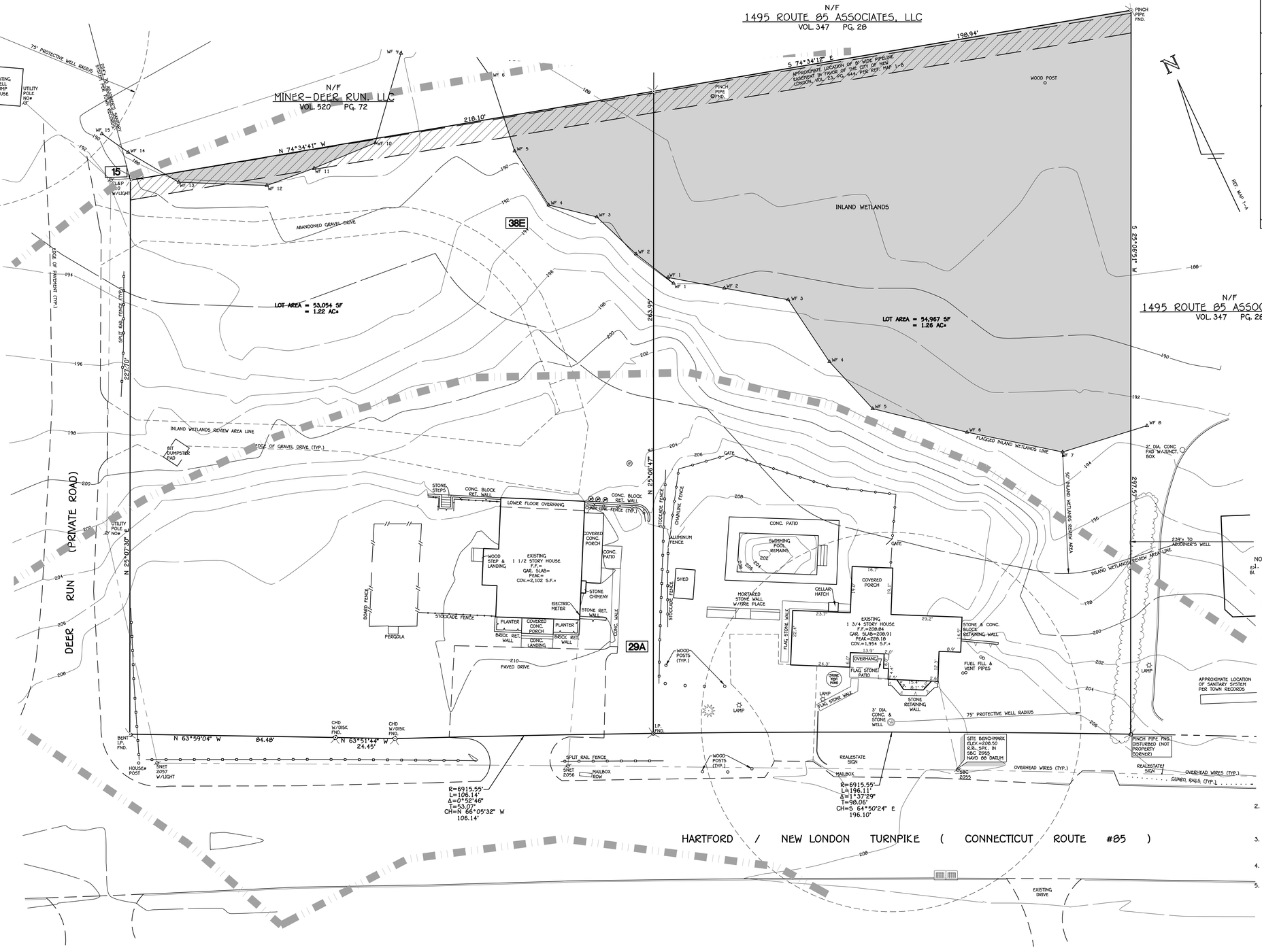

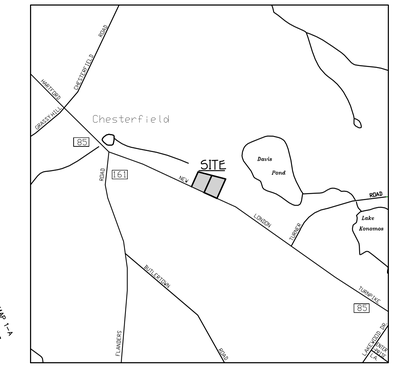

LOCATION MAP
SCALE: 1" = 1000'±

Applicant Exhibit 14

SOIL TYPE LEGEND	
15	15 SCARBORO MUCK, 0 TO 3 PERCENT SLOPES
38E	38E HINCKLEY LOAMY SAND, 15 TO 45 PERCENT SLOPES
29A	29A AGAWAM FINE SANDY LOAM, 0 TO 3 PERCENT SLOPES

NOTES:

1. REFERENCE IS MADE TO THE FOLLOWING MAPS:
   A. PROPERTY SURVEY MAP, PROPERTY OF, JOETTE J. GAREY, 1499 HARTFORD NEW LONDON TURNPIKE, OAKDALE/MONTVILLE, CONNECTICUT, DATE: FEBRUARY 21, 2018, BY ANGUS McDONALD/GARY SHARPE & ASSOCIATES, INC.
   B. SITE DEVELOPMENT PLAN, PROPERTIES OF, JOETTE J. GAREY, 1499 & 1505 HARTFORD NEW LONDON TURNPIKE, OAKDALE/MONTVILLE, CONNECTICUT, DATE: OCTOBER 31, 2018, BY ANGUS MCDONALD/GARY SHARPE & ASSOCIATES, INC.
   C. PROPERTY SURVEY AND SUBDIVISION PLAN, PROPERTY OF, W. LAWRENCE MINER, JR., REVOCABLE TRUST, HARTFORD ROAD (CONNECTICUT ROUTE 85) AND CHESTERFIELD ROAD, MONTVILLE, CONNECTICUT, DATE: JANUARY 20, 2000, REVISED THRU: 5/19100 BY: DICESARE-BENTLEY ENGINEERS, INC.
   D. PLAN SHOWING PROPERTY OF, ELIZABETH SADINSKY, ROUTE 85 AND OAKDALE-CHESTERFIELD ROAD, TOWN OF MONTVILLE, CONN., DATE: OCTOBER 1970, BY: DICESARE-BENTLEY-WELLING ENGR'S.
   E. TOWN ROADS, MONTVILLE, BY: CONNECTICUT DEPARTMENT OF TRANSPORTATION, REIVED TO DEC. 31, 1974, CGS DATA REVISED DEC. 15, 1999
   F. CONNECTICUT STATE HIGHWAY DEPARTMENT, RIGHT OF WAY MAP, TOWN OF MONTVILLE, HARTFORD-NEW LONDON ROAD, FROM THE KRUPCAL PROPERTY, SOUTHERLY ABOUT 5,550 FEET, ROUTE No. 102, SHEETS 1 & 2 OF 2, DATE: SEPT. 30-1930, REVISED: OCTOBER 16, 1967.
   G. TOWN OF MONTVILLE, ROUTE #85,PLAN SHOWING TAKING LINE AT, SADINSKY PROP. & ADJOINING PROP. OWNERS, BEGINNING AT ROUTE #161, FLANDERS ROAD, RUNNING SOUTHEASTERLY 2,300 FEET. DATE: JULY 1963.
   H. TOWN OF MONTVILLE, MAP SHOWING LAND AND EASEMENT ACQUIRED BY, THE STATE OF CONNECTICUT, FROM ELIZABETH K. SADINSKY, NEW LONDON TURNPIKE, DATE: DECEMBER 1948, SHEETS 1 & 2 OF 2.
2. FOR SUBJECT PROPERTY, REFERENCE IS MADE TO THE FOLLOWING DEEDS ON FILE IN THE TOWN OF MONTVILLE LAND RECORDS AS VOL. 581 PG. 49 & VOL. 638 PG. 521 AND LISTED ON ASSESSOR'S MAP 005 AS LOTS 24-00A & 23-00A
3. SUBJECT PROPERTY IS NOT IN A FLOOD HAZARD ZONE PER FEMA FLOOD INSURANCE RATE MAP, NEW LONDON COUNTY, CONNECTICUT, MAP NUMBER 09011C0337G, EFFECTIVE DATE: JULY 18, 2011
4. INLAND WETLANDS MARKED BY RICHARD SNARSKI, SOIL SCIENTIST, 2/15/2018 & 9/27/18 AND LOCATED BY FIELD SURVEY.
5. THIS PROJECT LIES WITHIN THE WATERSHED OF THE PUBLIC WATER SUPPLY OF THE CITY OF NEW LONDON DEPARTMENT OF PUBLIC UTILITIES.

20 15 10 5 0 20 40 60
SCALE IN FEET

LEGEND

	UTILITY POLE
CHD	CONN. HIGHWAY DEPT. MONUMENT
CONC. MON.	CONCRETE MONUMENT
M.S.	MERESTONE
FND.	FOUND
I.PIN	IRON PIN
I.P.	IRON PIPE
D.H.	DRILL HOLE
00	EXISTING CONTOURS
+0.00	EXISTING SPOT ELEVATION
	STONEWALL
	FIRE HYDRANT
00	EDGE OF WETLAND/FLAG NUMBER
	EDGE OF TREELINE
	RETAINING WALL
	SOIL TYPE BOUNDARY
HKC	SOIL TYPE SYMBOL
BCLC	BITUMINOUS CONCRETE LIP CURBING
W.S.O.	WATER SHUTOFF
W.G.	WATER GATE

I HAVE REVIEWED THE WETLANDS BOUNDARIES AS SHOWN ON THIS PLAN AND AM OF THE OPINION THAT THEY REPRESENT THE SOIL BOUNDARIES MARKED BY ME IN THE FIELD.

DATE 9/27/2018
RICHARD SNARSKI, CERTIFIED SOIL SCIENTIST, #1975

I HAVE REVIEWED THE WETLANDS BOUNDARIES AS SHOWN ON THIS PLAN AND AM OF THE OPINION THAT THEY REPRESENT THE SOIL BOUNDARIES MARKED BY ME IN THE FIELD.

DATE 2/15/2018
RICHARD SNARSKI, CERTIFIED SOIL SCIENTIST, #1975

STUART J. FAIRBANK
CONN. P.E. #20206

BOUNDARY LINES OF ADJOINING PROPERTIES ARE SHOWN FOR GENERAL INFORMATIONAL PURPOSES ONLY AND ARE NOT TO BE CONSTRUED AS BEING ACCURATELY LOCATED OR DEPICTED.

©2019 – ANGUS McDONALD / GARY SHARPE & ASSOCIATES, INC.

THESE DRAWINGS ARE THE PROPERTY OF ANGUS MCDONALD/GARY SHARPE & ASSOCIATES, INC. AND HAVE BEEN SPECIFICALLY PREPARED FOR THE OWNER OF THIS PROJECT OR PROPERTY, THEY ARE NOT TO BE DUPLICATED OR USED IN PART OR WHOLE FOR ANY OTHER PURPOSE, PROJECT, LOCATION OR OWNER WITHOUT THE EXPRESS WRITTEN CONSENT OF ANGUS MCDONALD/GARY SHARPE & ASSOCIATES, INC.

THE WORD "CERTIFY", AS USED IS UNDERSTOOD TO BE AN EXPRESSION OF PROFESSIONAL OPINION BY THE ENGINEER OR SURVEYOR. IT IS A DECLARATORY STATEMENT WHICH IS BASED ON HIS BEST KNOWLEDGE, INFORMATION AND BELIEF. AS SUCH IT CONSTITUTES NEITHER GUARANTEE NOR WARRANTY, EXPRESSED OR IMPLIED, OF ANY INFORMATION CONTAINED HEREON. NO CERTIFICATION IS EXPRESSED OR IMPLIED ON ANY ORIGINAL OR ANY DUPLICATE OF THIS PLAN UNLESS IT BEARS AN ORIGINAL STAMP OR SEAL AND ORIGINAL SIGNATURE OF THE INDIVIDUAL WHOSE REGISTRATION NUMBER APPEARS HEREON.

CERTIFICATION NOTES:

1. THIS SURVEY PLAN HAS BEEN PREPARED PURSUANT TO THE REGULATIONS OF CONNECTICUT STATE AGENCIES SECTION 20-300b-1 THROUGH 20-300b-20 AND THE "STANDARDS FOR SURVEYS AND MAPS IN THE STATE OF CONNECTICUT" AS ADOPTED BY THE CONNECTICUT ASSOCIATION OF LAND SURVEYORS, INC. ON SEPTEMBER 26, 1996.
   A. TYPE OF SURVEY: IMPROVEMENT LOCATION SURVEY
   B. BOUNDARY DETERMINATION: RESURVEY
   C. THIS SURVEY CONFORMS TO THE STANDARDS AND ACCURACY OF CLASS A-2 & T-2

ANGUS L. McDONALD JR.
CONN. L.S. #70173

TO MY KNOWLEDGE AND BELIEF THIS MAP IS SUBSTANTIALLY CORRECT AS NOTED HEREON.

LAND & MARINE ENGINEERING SURVEYING PLANNING

ANGUS McDONALD GARY SHARPE & ASSOCIATES, INC.
SINCE 1966
P.O. BOX 608, 233 BOSTON POST ROAD
OLD SAYBROOK, CONNECTICUT 06475
TEL. (860) 388-4671 FAX (860) 388-3962

IMPROVEMENT LOCATION SURVEY
PREPARED FOR
DEER RUN STABLE, LLC
1499 & 1505 HARTFORD NEW LONDON TURNPIKE
OAKDALE/MONTVILLE, CONNECTICUT

DATE: JANUARY 10, 2019	SCALE: 1"=20'	
DR'N DO'D	CK'D	APP'D
SHEET 1 of 11	JOB NO. 186333	
REVISIONS: 1-23-20 UPDATED, 2-20-20 UPDATED, 2-27-20 PER TOWN PLANNER		

SHOWING EXISTING CONDITIONS

F:\Jobs2018\6333-Chicadee-Montville\Dwgs\Existing Conditions 3-25-2019.dwg, 1 OF 11 EXISTING CONDITIONS 20, 3/25/2020 8:32:07 AM

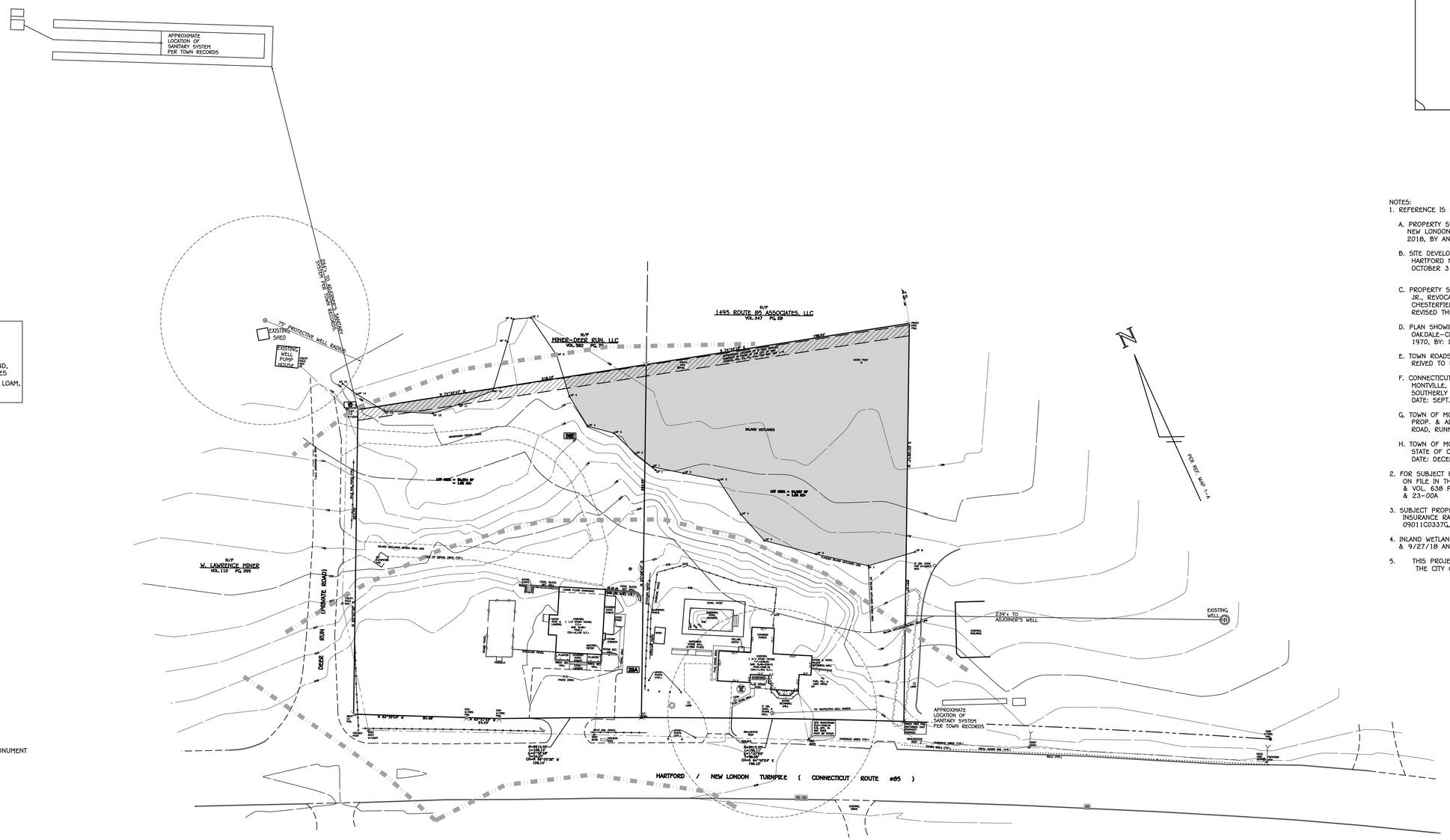

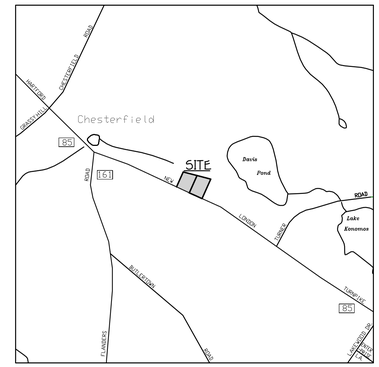

LOCATION MAP

SCALE: 1" = 1000' ±

NOTES:

1. REFERENCE IS MADE TO THE FOLLOWING MAPS:

   A. PROPERTY SURVEY MAP, PROPERTY OF, JOETTE J. GAREY, 1499 HARTFORD NEW LONDON TURNPIKE, OAKDALE/MONTVILLE, CONNECTICUT, DATE: FEBRUARY 21, 2018, BY ANGUS McDONALD/GARY SHARPE & ASSOCIATES, INC.

   B. SITE DEVELOPMENT PLAN, PROPERTIES OF, JOETTE J. GAREY, 1499 & 1505 HARTFORD NEW LONDON TURNPIKE, OAKDALE/MONTVILLE, CONNECTICUT, DATE: OCTOBER 31, 2018, BY ANGUS MCDONALD/GARY SHARPE & ASSOCIATES, INC.

   C. PROPERTY SURVEY AND SUBDIVISION PLAN, PROPERTY OF, W. LAWRENCE MINER, JR., REVOCABLE TRUST, HARTFORD ROAD (CONNECTICUT ROUTE 85) AND CHESTERFIELD ROAD, MONTVILLE, CONNECTICUT, DATE: JANUARY 20, 2000, REVISED THRU: 5/19100 BY: DICESARE-BENTLEY ENGINEERS, INC.

   D. PLAN SHOWING PROPERTY OF, ELIZABETH SADINSKY, ROUTE 85 AND OAKDALE-CHESTERFIELD ROAD, TOWN OF MONTVILLE, CONN., DATE: OCTOBER 1970, BY: DICESARE-BENTLEY-WELLING ENGR'S.

   E. TOWN ROADS, MONTVILLE, BY: CONNECTICUT DEPARTMENT OF TRANSPORTATION, REIVED TO DEC. 31, 1974, CGS DATA REVISED DEC. 15, 1999

   F. CONNECTICUT STATE HIGHWAY DEPARTMENT, RIGHT OF WAY MAP, TOWN OF MONTVILLE, HARTFORD-NEW LONDON ROAD, FROM THE KRUPCAL PROPERTY, SOUTHERLY ABOUT 5,550 FEET, ROUTE No. 102, SHEETS 1 & 2 OF 2, DATE: SEPT. 30-1930, REVISED: OCTOBER 16, 1967.

   G. TOWN OF MONTVILLE, ROUTE #85,PLAN SHOWING TAKING LINE AT, SADINSKY PROP. & ADJOINING PROP. OWNERS, BEGINNING AT ROUTE #161, FLANDERS ROAD, RUNNING SOUTHEASTERLY 2,300 FEET. DATE: JULY 1963.

   H. TOWN OF MONTVILLE, MAP SHOWING LAND AND EASEMENT ACQUIRED BY, THE STATE OF CONNECTICUT, FROM ELIZABETH K. SADINSKY, NEW LONDON TURNPIKE, DATE: DECEMBER 1948, SHEETS 1 & 2 OF 2.

2. FOR SUBJECT PROPERTY, REFERENCE IS MADE TO THE FOLLOWING DEEDS ON FILE IN THE TOWN OF MONTVILLE LAND RECORDS AS VOL. 581 PG. 49 & VOL. 638 PG. 521 AND LISTED ON ASSESSOR'S MAP 005 AS LOTS 24-00A & 23-00A

3. SUBJECT PROPERTY IS NOT IN A FLOOD HAZARD ZONE PER FEMA FLOOD INSURANCE RATE MAP, NEW LONDON COUNTY, CONNECTICUT, MAP NUMBER 09011C0337G, EFFECTIVE DATE: JULY 18, 2011

4. INLAND WETLANDS MARKED BY RICHARD SNARSKI, SOIL SCIENTIST, 2/15/2018 & 9/27/18 AND LOCATED BY FIELD SURVEY.

5. THIS PROJECT LIES WITHIN THE WATERSHED OF THE PUBLIC WATER SUPPLY OF THE CITY OF NEW LONDON DEPARTMENT OF PUBLIC UTILITIES.

SOIL TYPE LEGEND

15	15 SCARBORO MUCK, 0 TO 3 PERCENT SLOPES
38E	38E HINCKLEY LOAMY SAND, 15 TO 45 PERCENT SLOPES
29A	29A AGAWAM FINE SANDY LOAM, 0 TO 3 PERCENT SLOPES

LEGEND

	UTILITY POLE
CHD	CONN. HIGHWAY DEPT. MONUMENT
CONC. MON.	CONCRETE MONUMENT
M.S.	MERESTONE
FND.	FOUND
I.PIN	IRON PIN
I.P.	IRON PIPE
D.H.	DRILL HOLE
00	EXISTING CONTOURS
+0.00	EXISTING SPOT ELEVATION
	STONEWALL
	FIRE HYDRANT
00	EDGE OF WETLAND/FLAG NUMBER
	EDGE OF TREELINE
	RETAINING WALL
	SOIL TYPE BOUNDARY
HKC	SOIL TYPE SYMBOL
BCLC	BITUMINOUS CONCRETE LIP CURBING
W.S.O.	WATER SHUTOFF
W.G.	WATER GATE

I HAVE REVIEWED THE WETLANDS BOUNDARIES AS SHOWN ON THIS PLAN AND AM OF THE OPINION THAT THEY REPRESENT THE SOIL BOUNDARIES MARKED BY ME IN THE FIELD.

RICHARD SNARSKI, CERTIFIED SOIL SCIENTIST, #1975 — DATE 9/27/2018

I HAVE REVIEWED THE WETLANDS BOUNDARIES AS SHOWN ON THIS PLAN AND AM OF THE OPINION THAT THEY REPRESENT THE SOIL BOUNDARIES MARKED BY ME IN THE FIELD.

RICHARD SNARSKI, CERTIFIED SOIL SCIENTIST, #1975 — DATE 2/15/2018

40 30 20 10 0 40 80 120
SCALE IN FEET

SHOWING EXISTING CONDITIONS

STUART J. FAIRBANK
CONN. P.E. #20206

BOUNDARY LINES OF ADJOINING PROPERTIES ARE SHOWN FOR GENERAL INFORMATIONAL PURPOSES ONLY AND ARE NOT TO BE CONSTRUED AS BEING ACCURATELY LOCATED OR DEPICTED.

©2019 – ANGUS McDONALD / GARY SHARPE & ASSOCIATES, INC.

THESE DRAWINGS ARE THE PROPERTY OF ANGUS MCDONALD/GARY SHARPE & ASSOCIATES, INC. AND HAVE BEEN SPECIFICALLY PREPARED FOR THE OWNER OF THIS PROJECT OR PROPERTY, THEY ARE NOT TO BE DUPLICATED OR USED IN PART OR WHOLE FOR ANY OTHER PURPOSE, PROJECT, LOCATION OR OWNER WITHOUT THE EXPRESS WRITTEN CONSENT OF ANGUS MCDONALD/GARY SHARPE & ASSOCIATES, INC.

THE WORD "CERTIFY", AS USED IS UNDERSTOOD TO BE AN EXPRESSION OF PROFESSIONAL OPINION BY THE ENGINEER OR SURVEYOR. IT IS A DECLARATORY STATEMENT WHICH IS BASED ON HIS BEST KNOWLEDGE, INFORMATION AND BELIEF. AS SUCH IT CONSTITUTES NEITHER GUARANTEE NOR WARRANTY, EXPRESSED OR IMPLIED, OF ANY INFORMATION CONTAINED HEREON. NO CERTIFICATION IS EXPRESSED OR IMPLIED ON ANY ORIGINAL OR ANY DUPLICATE OF THIS PLAN UNLESS IT BEARS AN ORIGINAL STAMP OR SEAL AND ORIGINAL SIGNATURE OF THE INDIVIDUAL WHOSE REGISTRATION NUMBER APPEARS HEREON.

CERTIFICATION NOTES:

1. THIS SURVEY PLAN HAS BEEN PREPARED PURSUANT TO THE REGULATIONS OF CONNECTICUT STATE AGENCIES SECTION 20-300b-1 THROUGH 20-300b-20 AND THE "STANDARDS FOR SURVEYS AND MAPS IN THE STATE OF CONNECTICUT" AS ADOPTED BY THE CONNECTICUT ASSOCIATION OF LAND SURVEYORS, INC. ON SEPTEMBER 26, 1996.

   A. TYPE OF SURVEY: IMPROVEMENT LOCATION SURVEY
   B. BOUNDARY DETERMINATION: RESURVEY
   C. THIS SURVEY CONFORMS TO THE STANDARDS AND ACCURACY OF CLASS A-2 & T-2

ANGUS L. McDONALD JR.
CONN. L.S. #70173

TO MY KNOWLEDGE AND BELIEF THIS MAP IS SUBSTANTIALLY CORRECT AS NOTED HEREON.

LAND & MARINE ENGINEERING SURVEYING PLANNING

ANGUS McDONALD GARY SHARPE & ASSOCIATES, INC.

SINCE 1966

P.O. BOX 606, 233 BOSTON POST ROAD
OLD SAYBROOK, CONNECTICUT 06475
TEL. (860) 388-4671 FAX (860) 388-3962

IMPROVEMENT LOCATION SURVEY
PREPARED FOR
DEER RUN STABLE, LLC
1499 & 1505 HARTFORD NEW LONDON TURNPIKE
OAKDALE/MONTVILLE, CONNECTICUT

DATE: JANUARY 10, 2019 SCALE: 1"=20'

DR'N DO'D	CK'D	APP'D
SHEET 2 of 11	JOB NO. 186333	

REVISIONS: 12-19-19 UPLAND REVIEW AREA CORRECTED, 1-23-20 UPDATED 2-20-20 UPDATED, 2-27-20 PER TOWN PLANNER

F:\186333\186333-Chisolm Wm\Arch\Dwgs\Existing Conditions 3-25-2019.dwg, 2 OF 11 EXISTING CONDITIONS 40, 3/25/2020 8:30:44 AM

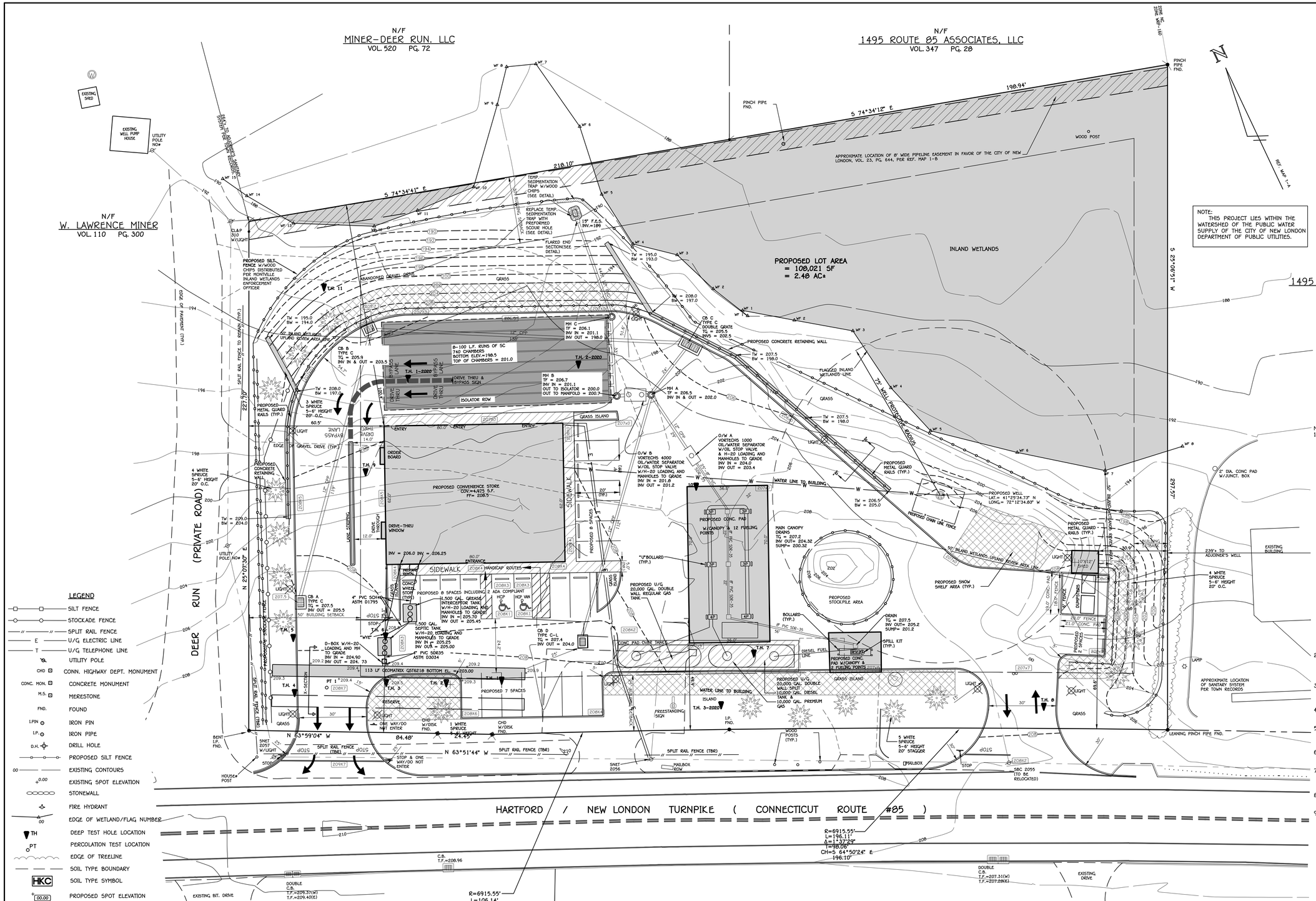

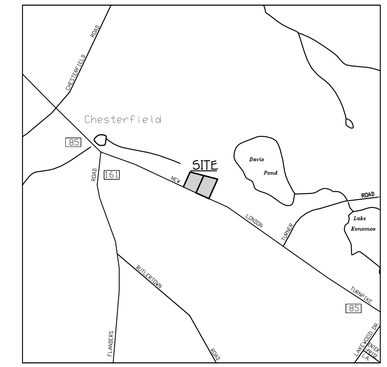

LOCATION MAP
SCALE: 1" = 1000'±

NOTE:
THIS PROJECT LIES WITHIN THE WATERSHED OF THE PUBLIC WATER SUPPLY OF THE CITY OF NEW LONDON DEPARTMENT OF PUBLIC UTILITIES.

N/F
1495 ROUTE 85 ASSOCIATES, LLC
VOL. 347 PG. 28

ZONING DATA TABLE
C-1 ZONING DISTRICT

REQUIREMENT	REQUIREMENT	PROPOSED
MIN. LOT AREA	40,000 S.F.	108,021 S.F.
MIN. LOT FRONTAGE	200'*	411.17'
MIN. FRONT YARD	25**	75.1'
MIN. SIDE YARD	15'	60.5'
MIN. REAR YARD	30'	100.4'
MIN. FRONT YARD	25**	49.9'
MIN. SIDE YARD	10'**	91.8'
MIN. REAR YARD	20'**	139.0'

* SECTION 4.11.10.2
** SECTION 4.11.10.3

NOTES:
1. REFERENCE IS MADE TO THE FOLLOWING MAPS:

A. PROPERTY SURVEY MAP, PROPERTY OF, JOETTE J. GAREY, 1499 HARTFORD NEW LONDON TURNPIKE, OAKDALE/MONTVILLE, CONNECTICUT, DATE: FEBRUARY 21, 2018, BY ANGUS McDONALD/GARY SHARPE & ASSOCIATES, INC.

B. SITE DEVELOPMENT PLAN, PROPERTIES OF, JOETTE J. GAREY, 1499 & 1505 HARTFORD NEW LONDON TURNPIKE, OAKDALE/MONTVILLE, CONNECTICUT, DATE: OCTOBER 31, 2018, BY ANGUS MCDONALD/GARY SHARPE & ASSOCIATES, INC.

C. PROPERTY SURVEY AND SUBDIVISION PLAN, PROPERTY OF, W. LAWRENCE MINER, JR., REVOCABLE TRUST, HARTFORD ROAD (CONNECTICUT ROUTE 85) AND CHESTERFIELD ROAD, MONTVILLE, CONNECTICUT, DATE: JANUARY 20, 2000, REVISED THRU: 5/19100 BY: DICESARE-BENTLEY ENGINEERS, INC.

D. PLAN SHOWING PROPERTY OF, ELIZABETH SADINSKY, ROUTE 85 AND OAKDALE-CHESTERFIELD ROAD, TOWN OF MONTVILLE, CONN., DATE: OCTOBER 1970, BY: DICESARE-BENTLEY-WELLING ENG'S.

E. TOWN ROADS, MONTVILLE, BY: CONNECTICUT DEPARTMENT OF TRANSPORTATION, REVED TO DEC. 31, 1974, CGS DATA REVISED DEC. 15, 1999

F. CONNECTICUT STATE HIGHWAY DEPARTMENT, RIGHT OF WAY MAP, TOWN OF MONTVILLE, HARTFORD-NEW LONDON ROAD, FROM THE KRUPCAL PROPERTY, SOUTHERLY ABOUT 5,550 FEET, ROUTE No. 102, SHEETS 1 & 2 OF 2, DATE: SEPT. 30-1930, REVISED: OCTOBER 16, 1967.

G. TOWN OF MONTVILLE, ROUTE #85,PLAN SHOWING TAKING LINE AT, SADINSKY PROP. & ADJOINING PROP. OWNERS, BEGINNING AT ROUTE #161, FLANDERS ROAD, RUNNING SOUTHEASTERLY 2,300 FEET. DATE: JULY 1963.

H. TOWN OF MONTVILLE, MAP SHOWING LAND AND EASEMENT ACQUIRED BY, THE STATE OF CONNECTICUT, FROM ELIZABETH K. SADINSKY, NEW LONDON TURNPIKE, DATE: DECEMBER 1948, SHEETS 1 & 2 OF 2.

2. FOR SUBJECT PROPERTY, REFERENCE IS MADE TO THE FOLLOWING DEEDS ON FILE IN THE TOWN OF MONTVILLE LAND RECORDS AS VOL. 581 PG. 49 & VOL. 638 PG. 521 AND LISTED ON ASSESSOR'S MAP 005 AS LOTS 24-00A & 23-00A
3. SUBJECT PROPERTY IS NOT IN A FLOOD HAZARD ZONE PER FEMA FLOOD INSURANCE RATE MAP, NEW LONDON COUNTY, CONNECTICUT, MAP NUMBER 09011C0337G, EFFECTIVE DATE: JULY 18, 2011
4. INLAND WETLANDS MARKED BY RICHARD SNARSKI, SOIL SCIENTIST, 2/15/2018 & 9/27/18 AND LOCATED BY FIELD SURVEY.
5. THE STONEWALLS AND/OR FENCES SHOWN AS BOUNDARIES MAY HAVE IRREGULARITIES OF COURSE BETWEEN PRINCIPAL POINTS OF COURSE INDICATED.
6. CALL BEFORE YOU DIG (1-800-922-4455) SHALL BE CONTACTED PRIOR TO PROJECT INITIATION.
7. DESIGN ENGINEER/LAND SURVEYOR TO SET A STABLE BENCHMARK AND STAKE & OFFSET SEPTIC SYSTEM PRIOR TO INSTALLATION. INSTALLER TO NOTIFY ENGINEER (3) BUSINESS DAYS BEFORE INSTALLATION.
8. PRIOR TO THE START OF CONSTRUCTION, THE BUILDING, WELL AND SEPTIC SYSTEM ARE TO BE STAKED BY A LICENSED SURVEYOR.
9. DESIGN ENGINEER/LAND SURVEYOR TO CONDUCT AN AS-BUILT SURVEY OF THE SEPTIC SYSTEM PRIOR TO BACKFILL. INSTALLER TO NOTIFY ENGINEER (3) BUSINESS DAYS BEFORE SYSTEM COMPLETION.

LEGEND

	SILT FENCE
	STOCKADE FENCE
	SPLIT RAIL FENCE
E	U/G ELECTRIC LINE
T	U/G TELEPHONE LINE
	UTILITY POLE
CHD	CONN. HIGHWAY DEPT. MONUMENT
CONC. MON.	CONCRETE MONUMENT
M.S.	MERESTONE
FND.	FOUND
I.PIN	IRON PIN
I.P.	IRON PIPE
D.H.	DRILL HOLE
	PROPOSED SILT FENCE
00	EXISTING CONTOURS
+0.00	EXISTING SPOT ELEVATION
	STONEWALL
	FIRE HYDRANT
00	EDGE OF WETLAND/FLAG NUMBER
TH	DEEP TEST HOLE LOCATION
PT	PERCOLATION TEST LOCATION
	EDGE OF TREELINE
	SOIL TYPE BOUNDARY
HKC	SOIL TYPE SYMBOL
00.00	PROPOSED SPOT ELEVATION
00	PROPOSED CONTOUR
	RETAINING WALL
TBR	TO BE REMOVED
BCLC	BITUMINOUS CONCRETE LIP CURBING
W.S.O.	WATER SHUTOFF
W.G.	WATER GATE
	WELL
	CATCH BASIN
	SNOW STORAGE AREA

PARKING CALCULATIONS

PROPOSED BUILDING = 4,960 SF
5 SPACES/1,000 SF = 25 SPACES
1 SPACE/3 SEATS = 2 SPACES
1 SPACE AT AIR = 1 SPACE
1 SPACE/2 EMPLOYEES = 1 SPACE
REQUIRED SPACES = 29

PROPOSED PARKING SPACES

16 AT FUELING POINTS
25 SPACES 10' X 20'
PARKING SPACES PROVIDED = 42

STUART J. FAIRBANK
CONN. P.E. #20206

BOUNDARY LINES OF ADJOINING PROPERTIES ARE SHOWN FOR GENERAL INFORMATIONAL PURPOSES ONLY AND ARE NOT TO BE CONSTRUED AS BEING ACCURATELY LOCATED OR DEPICTED.

©2019 – ANGUS McDONALD / GARY SHARPE & ASSOCIATES, INC.

THESE DRAWINGS ARE THE PROPERTY OF ANGUS MCDONALD/GARY SHARPE & ASSOCIATES, INC. AND HAVE BEEN SPECIFICALLY PREPARED FOR THE OWNER OF THIS PROJECT OR PROPERTY. THEY ARE NOT TO BE DUPLICATED OR USED IN PART OR WHOLE FOR ANY OTHER PURPOSE, PROJECT, LOCATION OR OWNER WITHOUT THE EXPRESS WRITTEN CONSENT OF ANGUS MCDONALD/GARY SHARPE & ASSOCIATES, INC.

THE WORD "CERTIFY", AS USED IS UNDERSTOOD TO BE AN EXPRESSION OF PROFESSIONAL OPINION BY THE ENGINEER OR SURVEYOR. IT IS A DECLARATORY STATEMENT WHICH IS BASED ON HIS BEST KNOWLEDGE, INFORMATION AND BELIEF. AS SUCH IT CONSTITUTES NEITHER GUARANTEE NOR WARRANTY, EXPRESSED OR IMPLIED, OF ANY INFORMATION CONTAINED HEREON. NO CERTIFICATION IS EXPRESSED OR IMPLIED ON ANY ORIGINAL OR ANY DUPLICATE OF THIS PLAN UNLESS IT BEARS AN ORIGINAL STAMP OR SEAL AND ORIGINAL SIGNATURE OF THE INDIVIDUAL WHOSE REGISTRATION NUMBER APPEARS HEREON.

LAND & MARINE
ENGINEERING SURVEYING PLANNING

ANGUS McDONALD
GARY SHARPE
& ASSOCIATES, INC.
SINCE 1966

P.O. BOX 608, 233 BOSTON POST ROAD
OLD SAYBROOK, CONNECTICUT 06475
TEL. (860) 388-4671 FAX (860) 388-3962

SITE DEVELOPMENT PLAN
PREPARED FOR
DEER RUN STABLE, LLC
1499 & 1505 HARTFORD NEW LONDON TURNPIKE
OAKDALE/MONTVILLE, CONNECTICUT

DATE: JULY 10, 2019		SCALE: 1"=20'
DR'N DO'D	CK'D	APP'D
SHEET 3 of 11	JOB NO. 186333	

REVISIONS: 1/13/20 REVISED PER COMMENTS, 1/24/20 DRIVE, GRADING & WELLS 2-20-20 UPDATED, 2-27-20 PER TOWN PLANNER, 3-11-20

F:\Jobs\2018\6333-Chaudhry Microtel\ArcGIS\Site Development Plan 3-25-2020 new layout.dwg, 2-of-11-SDP30, 3/25/2020 8:34:05 AM

APPLICATION OF DEER RUN STABLE, LLC
TO
TOWN OF MONTVILLE INLAND WETLANDS AND WATERCOURSES COMMISSION

NARRATIVE DESCRIPTION AND CONSTRUCTION SEQUENCE RELATIVE TO THE DEVELOPMENT OF A COMMERCIAL SITE ON PROPERTY LOCATED AT 1499 AND 1505 HARTFORD-NEW LONDON TURNPIKE (CONNECTICUT ROUTE 85), MONTVILLE, CONNECTICUT FOR A GASOLINE/CONVENIENCE STORE FACILITY

PROJECT OVERVIEW

ASIF CHOUDHRY IS THE OWNER OF REAL PROPERTY LOCATED AT 1499 HARTFORD-NEW LONDON TURNPIKE, MONTVILLE, CONNECTICUT. THIS PROPERTY CONSISTS OF 1.26 ACRES OF LAND, MORE OR LESS, AND IS LOCATED ON THE NORTHEASTERLY SIDE OF CONNECTICUT ROUTE #85. THE PROPERTY OF DEER RUN STABLE, LLC, ABUTS THE PROPERTY OF ASIF CHOUDHRY TO THE WEST AND CONSISTS OF 1.22 ACRES OF LAND, MORE OR LESS, EACH AS SHOWN ON A PLAN ENTITLED "SHOWING EXISTING CONDITIONS IMPROVEMENT LOCATION SURVEY PREPARED FOR DEER RUN STABLE, LLC 1499 & 1505 HARTFORD NEW LONDON TURNPIKE OAKDALE/MONTVILLE, CONNECTICUT DATE: JANUARY 10, 2019 SCALE: 1" = 20'" PREPARED BY ANGUS MCDONALD GARY SHARPE & ASSOCIATES, INC. (THE "EXISTING CONDITIONS PLAN"). ASIF CHOUDHRY HAS AUTHORIZED DEER RUN STABLE, LLC TO FILE AN APPLICATION WITH THE TOWN OF MONTVILLE INLAND WETLANDS AND WATERCOURSES COMMISSION FOR THE COMBINED REDEVELOPMENT OF ITS REAL PROPERTY WITH THAT OWNED OF RECORD BY DEER RUN STABLE, LLC (COLLECTIVELY, THE "PROPERTY") FOR A PROPOSED GASOLINE/CONVENIENCE STORE FACILITY. IN CONJUNCTION WITH THE REDEVELOPMENT OF THESE COMBINED PROPERTIES, THE APPLICANT, DEER RUN STABLE, LLC (HEREINAFTER THE "APPLICANT") IS FILING AN APPLICATION FOR A PERMIT TO CONDUCT REGULATED ACTIVITIES IN UPLAND REVIEW AREAS ADJACENT TO INLAND WETLANDS WITH THE TOWN OF MONTVILLE INLAND WETLANDS AND WATERCOURSES COMMISSION.

THE INLAND WETLANDS ON THE APPLICANT'S PROPERTIES HAVE BEEN DESIGNATED BY WETLAND FLAGS 1 - 8 (TO THE EAST OF THE DIVISION LINE BETWEEN THE PROPERTIES LOCATED AT 1499 AND 1505 HARTFORD-NEW LONDON TURNPIKE) AND 1 - 13 (TO THE WEST OF THE DIVISION LINE BETWEEN THE PROPERTIES KNOWN AS 1499 AND 1505 HARTFORD-NEW LONDON TURNPIKE) AS DESIGNATED ON THE EXISTING CONDITIONS PLAN. THE WETLAND LIMITS ON THE PROPERTIES WERE INITIALLY FLAGGED BY RICHARD SNARSKI ON FEBRUARY 15, 2018 AND SEPTEMBER 27, 2018. THE LOCATION OF THE LIMITS OF INLAND WETLANDS ON THE APPLICATION PARCELS WAS VERIFIED BY FIELD INSPECTION BY DEMIAN A. SORRENTINO, CERTIFIED PLANNER AND SOIL SCIENTIST ON AUGUST 30, 2019.

THE PROPERTY IS CURRENTLY IMPROVED WITH TWO SINGLE FAMILY DWELLING HOUSES. THE PROPERTY IS LOCATED IN A C-1 COMMERCIAL ZONING DISTRICT PURSUANT TO THE ZONING MAP PROMULGATED BY THE TOWN OF MONTVILLE INLAND WETLANDS AND WATERCOURSES COMMISSION. SINGLE FAMILY RESIDENCES ARE NON-PERMITTED USES IN THE C-1 ZONING DISTRICT AND ARE CURRENTLY LEGALLY NON-CONFORMING. THE APPLICANT PROPOSES TO RAZE ALL IMPROVEMENTS CURRENTLY LOCATED ON THE PROPERTY AND TO RE-DEVELOP THE PROPERTY FOR A MODERN GASOLINE/CONVENIENCE STORE FACILITY, A USE PERMITTED BY SPECIAL PERMIT IN THE C-1 ZONING DISTRICT. THE IMPROVEMENTS ON THE PROPERTY WILL BE SERVED BY AN ON-SITE WELL AND AN ON-SITE SEPTIC SYSTEM.

AS DEPICTED ON THE EXISTING CONDITIONS PLAN, THE SOUTHERLY PORTION OF THE PROPERTY IS RELATIVELY FLAT, ENJOYING AN ELEVATION OF APPROXIMATELY 208 FEET ABOVE MEAN SEA LEVEL. THE NORTHERLY PORTION OF THE PROPERTY SLOPES TO THE NORTHWEST AND THE NORTHEAST WITH A CHANGE OF ELEVATION TO APPROXIMATE ELEVATION 193 FEET ABOVE MEAN SEA LEVEL, THE APPROXIMATE ELEVATION OF THE DELINEATED INLAND WETLAND BOUNDARY AS DEPICTED ON THE EXISTING CONDITIONS PLAN.

IN ORDER TO ESTABLISH A VIABLE COMMERCIAL USE ON THE PROPERTY, IT IS NECESSARY TO GRADE WITHIN THE 50' UPLAND REVIEW AREA ADJACENT SOUTHWESTERLY AND SOUTHERLY OF THE INLAND WETLAND SYSTEMS LOCATED ON THE PROPERTY. IN ORDER TO AVOID ANY DIRECT IMPACTS TO INLAND WETLANDS, THE APPLICANT PROPOSES TO RETAIN THE NORTHERLY AND NORTHEASTERLY PERIPHERY OF THE IMPROVED SITE WITH A RETAINING WALL WHICH WILL EFFECTIVELY SEGREGATE THE IMPROVED PORTION OF THE PROJECT SITE AT ELEVATION 207 +/- FROM THE UPLAND AREA ADJACENT SOUTHWESTERLY AND SOUTHERLY OF THE WETLAND SYSTEMS AT APPROXIMATE ELEVATION 194.

IN ADDITION, THE APPLICANT IS PROPOSING TO DISCHARGE TREATED STORMWATER FROM THE IMPROVED AREA OF THE PROJECT SITE TO A RIP RAP PREFORMED SCOUR HOLELOCATED ADJACENT WESTERLY OF WETLAND FLAG 5 AS DEPICTED ON THE EXISTING CONDITIONS PLAN. THE APPLICANT'S DESIGN ENGINEER HAS INCORPORATED A ROBUST WATER QUALITY RENOVATION PLAN INTO THE VERNACULAR OF THE PROPOSED COMMERCIAL PROJECT TO INSURE THAT A HIGHLY RENOVATED STORMWATER IS DISCHARGED FROM THE PROJECT SITE TO THE ENVIRONMENT.

PROPOSED REGULATED ACTIVITIES

1. CONSTRUCTION OF A CONCRETE RETAINING WALL TO RETAIN THE IMPROVED PORTION OF THE COMMERCIAL SITE WITHIN THE UPLAND REVIEW AREA ADJACENT SOUTHWESTERLY TO WETLAND FLAGS 3-1 AND 1-7.

2. MAINTENANCE OF AN IMPROVED COMMERCIAL SITE WITHIN THE UPLAND REVIEW AREA ADJACENT SOUTHWESTERLY TO WETLAND FLAGS 5-1 AND 1-7, INCLUDING A DUMPSTER PAD, A 10' X 12' SHED, FUEL PUMPING POINTS (NO STORAGE), PAVED AREAS, STORMWATER TREATMENT STRUCTURES AND SITE IMPROVEMENTS.

3. DISCHARGE OF RENOVATED STORMWATER TO A RIP RAP PREFORMED SCOUR HOLEADJACENT WESTERLY TO WETLAND FLAGS 4-5.

SOILS

UPLAND SOILS

AGAWAM FINE SANDY LOAM

THE AGAWAM SERIES CONSISTS OF WELL DRAINED SOILS THAT FORMED IN GLACIAL OUTWASH. AGAWAM SOILS ARE FOUND ON STREAM TERRACES AND OUTWASH PLAINS. SLOPES RANGE FROM 0-3%. THE AGAWAM SOILS ARE FOUND IN A DRAINAGE SEQUENCE ON THE LANDSCAPE WITH MODERATELY WELL DRAINED NINIGRET SOILS. THEY ARE NEAR EXCESSIVELY DRAINED HINCKLEY SOILS, SOMEWHAT EXCESSIVELY DRAINED MERIMACK SOILS, WELL DRAINED HAVEN, CANTON AND CHARLTON SOILS AND POORLY DRAINED RAYPOL AND WALPOLE SOILS. THE TYPICAL STRATIFICATION OF THE AGAWAM SOILS IS AS FOLLOWS:

0"-9" DARK BROWN FINE SANDY LOAM; WEAK MEDIUM GRANULAR STRUCTURE; VERY FRIABLE; FEW FINE ROOTS; 5% COURSE FRAGMENTS; STRONGLY ACID; ABRUPT WAVY BOUNDARY.
9"-19" DARK YELLOWISH BROWN FINE LOAM; WEAK MEDIUM SUBANGULAR BLOCKY STRUCTURE; VERY FRIABLE; FEW FINE ROOTS; 5% COURSE FRAGMENTS; STRONGLY ACID; GRADUAL WAVY BOUNDARY.
19"-24" DARK YELLOWISH BROWN FINE SANDY LOAM; WEAK MEDIUM SUBANGULAR BLOCKY STRUCTURE; VERY FRIABLE; FEW FINE ROOTS; 5% COURSE FRAGMENTS; MEDIUM ACID; ABRUPT WAVY BOUNDARY.
24"-32" LIGHT OLIVE BROWN SAND; MASSIVE; VERY FRIABLE; FEW FINE ROOTS; 15% COURSE FRAGMENTS; MEDIUM ACID; ABRUPT WAVY BOUNDARY.
32"-60" LIGHT OLIVE BROWN VERY GRAVELLY COURSE SAND; SINGLE GRAIN; LOOSE; 55% COURSE FRAGMENTS; MEDIUM ACID. HINCKLEY LOAMY SAND

THIS HINCKLEY SOIL CONSISTS OF EXCESSIVELY DRAINED SOILS THAT FORMED IN GLACIAL OUTWASH. HINCKLEY SOILS ARE FOUND ON OUTWASH PLAINS, STREAM TERRACES, KAMES AND ESKERS. THE HINCKLEY SOILS ARE FOUND NEAR EXCESSIVELY DRAINED WINDSOR SOILS, SOMEWHAT EXCESSIVELY DRAINED MERIMACK SOILS, WELL DRAINED AGAWAM AND HAVEN SOILS, MODERATELY WELL DRAINED SUDBURY SOILS, POORLY DRAINED WALPOLE SOILS AND VERY POORLY DRAINED SCARBORO SOILS. HINCKLEY SOILS HAVE A GREATER CONTENT OF GRAVEL THAN MERIMACK, AGAWAM, HAVEN AND WINDSOR SOILS.

THE TYPICAL SOIL STRATIFICATION OF THE HINCKLEY SOIL IS AS FOLLOWS:

0"-7" DARK BROWN GRAVELLY SANDY LOAM; WEAK FINE GRANULAR STRUCTURE; VERY FRIABLE; MANY FINE ROOTS; 20% COURSE FRAGMENTS; MEDIUM ACID; ABRUPT WAVY BOUNDARY.
7"-14" YELLOWISH BROWN GRAVELLY LOAMY SAND; SINGLE GRAIN; LOSE; FEW FINE ROOTS; 25% COURSE FRAGMENTS; MEDIUM ACID; GRADUAL WAVY BOUNDARY.
14"-22" YELLOWISH BROWN GRAVELLY LOAMY SAND; SINGLE GRAIN; LOOSE; FEW FINE ROOTS; 40% COURSE FRAGMENTS; STRONGLY ACID; CLEAR WAVY BOUNDARY.
22"-60" BROWNISH YELLOW VERY GRAVELLY COURSE SAND; SINGLE GRAIN; LOOSE; 60% COURSE FRAGMENTS; MEDIUM ACID.

WETLAND SOILS

SCARBORO SOILS

THE SCARBORO SOIL CONSISTS OF VERY POORLY DRAINED SOIL THAT FORMED IN WATER-SORTED SAND AND GRAVEL. SCARBORO SOILS ARE FOUND ON OUTWASH PLAINS AND STREAM TERRACES. SLOPES RANGE FROM 0-3%. THE SCARBORO SOILS ARE FOUND ON THE LANDSCAPE NEAR EXCESSIVELY DRAINED HINCKLEY AND WINDSOR SOILS, SOMEWHAT EXCESSIVELY DRAINED MERIMACK SOILS, WELL DRAINED HAVEN AND AGAWAM SOILS, MODERATELY WELL DRAINED SUDBURY SOILS, POORLY DRAINED WALPOLE AND RAYPOL SOILS AND VERY POORLY DRAINED ADRIAN AND PALMS SOILS.

THE TYPICAL STRATIFICATION FOR THE SCARBORO SOIL IS AS FOLLOWS:

0" - 5" BLACK MUCK; LESS THAN 5% FIBER UNRUBBED AND RUBBED; MASSIVE; VERY FRIABLE; MANY FINE ROOTS; MEDIUM ACID; CLEAR WAVY BOUNDARY.
5" - 36" GRAY LOAMY SAND; COMMON MEDIUM PROMINENT YELLOWISH RED MOTTLES AND COMMON MEDIUM DISTINCT STRONG BROWN MOTTLES; MASSIVE; FRIABLE; MEDIUM ACID; CLEAR WAVY BOUNDARY.
36" - 60" GRAYISH BROWN SAND; COMMON MEDIUM PROMINENT STRONG BROWN MOTTLES; MASSIVE; FRIABLE; MEDIUM ACID.

PROPOSED REGULATED ACTIVITIES

1. CONSTRUCTION OF A RETAINING WALL WITHIN THE UPLAND REVIEW AREA ADJACENT TO WETLANDS.

2. GRADING AND COMMERCIAL DEVELOPMENT IN THE RETAINED AREA OF THE PROJECT SITE WHICH IS LOCATED IN THE UPLAND REVIEW AREA ADJACENT TO INLAND WETLANDS.

3. STORMWATER DISCHARGE IN AN UPLAND REVIEW AREA ADJACENT TO INLAND WETLANDS.

GENERAL PROCEDURES

1. PRIOR TO CONDUCTING ANY CONSTRUCTION ACTIVITIES ON THE PROPERTY, THE APPLICANT, AND ITS CONTRACTOR, SHALL MEET WITH THE MONTVILLE WETLANDS ENFORCEMENT OFFICER AND THE MONTVILLE ZONING ENFORCEMENT OFFICER TO DISCUSS AND AGREE UPON THE METHOD OF INSTALLATION AND MAINTENANCE OF EROSION AND SEDIMENT CONTROL MEASURES DURING CONSTRUCTION AS WELL AS A CONSTRUCTION INSPECTION SCHEDULE (THE "PRECONSTRUCTION MEETING").

2. SUBSEQUENT TO THE PRECONSTRUCTION MEETING, THE APPLICANT'S SURVEYOR SHALL DELINEATE IN THE FIELD THE LIMITS WITHIN WHICH CONSTRUCTION ACTIVITIES SHALL OCCUR AND SHALL FURTHER DELINEATE THE LOCATION FOR THE INSTALLATION OF ALL EROSION AND SEDIMENT CONTROL MEASURES AS DEPICTED ON A PLAN ENTITLED "SEDIMENTATION AND EROSION CONTROL PLAN PREPARED FOR DEER RUN STABLE, LLC 1499 & 1505 HARTFORD NEW LONDON TURNPIKE OAKDALE/MONTVILLE, CONNECTICUT DATE: JULY 10, 2019 SCALE: 1" = 20' SHEET 5 OF 10 JOB NO. 186333 ANGUS MCDONALD GARY SHARPE & ASSOCIATES, INC. P.O. BOX 608, 233 BOSTON POST ROAD OLD SAYBROOK, CONNECTICUT 06475 TEL. (860) 388-4671 FAX (860) 388-3962" (THE "EROSION CONTROL PLAN").

3. UPON AGREEMENT OF THE MONTVILLE WETLANDS ENFORCEMENT OFFICER AND THE MONTVILLE ZONING ENFORCEMENT OFFICER, THE APPLICANT SHALL CLEAR (BUT NOT GRUB) THE AREA REQUIRED FOR THE INSTALLATION OF EROSION AND SEDIMENT CONTROL MEASURES AS DELINEATED ON THE EROSION CONTROL PLAN.

4. ONCE CLEARING OF THE AREAS FOR THE INSTALLATION OF EROSION AND SEDIMENT CONTROL MEASURES HAS BEEN ACCOMPLISHED, THE APPLICANT (OR ITS CONTRACTOR) SHALL INSTALL THE EROSION AND SEDIMENT CONTROL MEASURES AS DELINEATED ON THE EROSION CONTROL PLAN. IN NO EVENT SHALL GRUBBING OR SOIL DISTURBANCE (OTHER THAN THAT REQUIRED FOR THE CLEARING ASSOCIATED WITH THE INSTALLATION OF EROSION AND SEDIMENT CONTROL MEASURES) OCCUR UNTIL SUCH TIME AS ALL EROSION AND SEDIMENT CONTROL MEASURES HAVE BEEN INSTALLED AND INSPECTED, AS HEREINAFTER PROVIDED.

5. AT SUCH TIME AS ALL EROSION AND SEDIMENT CONTROL MEASURES HAVE BEEN INSTALLED IN ACCORDANCE WITH THE EROSION CONTROL PLAN AND IN ACCORDANCE WITH THE REQUIREMENTS OF THE MONTVILLE WETLANDS ENFORCEMENT OFFICER AND THE MONTVILLE ZONING ENFORCEMENT OFFICER ENUNCIATED AT THE PRECONSTRUCTION MEETING, THE APPLICANT SHALL CONTACT THE MONTVILLE WETLANDS ENFORCEMENT OFFICER AND THE MONTVILLE ZONING ENFORCEMENT OFFICER TO PERFORM AN ON-SITE INSPECTION OF THE INSTALLATION OF SAID EROSION AND SEDIMENT CONTROL MEASURES. IN NO EVENT SHALL ACTUAL CONSTRUCTION ACTIVITIES BE COMMENCED EITHER WITH RESPECT TO THE DEMOLITION OF THE EXISTING BUILDINGS ON THE PROPERTY, THE CONSTRUCTION OF INFRASTRUCTURE FOR THE PROJECT OR ANY NEW IMPROVEMENTS ON THE PROPERTY, UNTIL SUCH TIME AS THE MONTVILLE WETLANDS ENFORCEMENT OFFICER AND THE MONTVILLE ZONING ENFORCEMENT OFFICER HAVE REVIEWED AND APPROVED THE INSTALLATION OF ALL APPLICABLE EROSION AND SEDIMENT CONTROL MEASURES.

6. CONSTRUCTION DEBRIS (I.E. RESULTING FROM THE DEMOLITION OF THE EXISTING DWELLINGS ON THE PROPERTY AND INCLUDING STUMPS AND/OR BRANCHES) SHALL BE REMOVED TO AN AREA APPROVED, IN ADVANCE, BY THE MONTVILLE ZONING ENFORCEMENT OFFICER AT A LOCATION WHICH IS REMOVED FROM THE PROJECT SITE. IN NO EVENT SHALL STUMPS OR CONSTRUCTION DEBRIS BE BURIED ON SITE.

7. ALL EROSION AND SEDIMENT CONTROL MEASURES SHALL BE INSPECTED AT LEAST TWICE WEEKLY WHILE CONSTRUCTION IS ONGOING AND AFTER EVERY STORM EVENT RESULTING IN THE DEPOSITION OF IN EXCESS OF ONE-TENTH OF ONE (0.10") INCH OF PRECIPITATION AND REPAIRED AND MAINTAINED AS NECESSARY.

8. IF ANY EROSION AND SEDIMENT CONTROL MEASURE FAILS OR IS NOT INSTALLED OR MAINTAINED IN ACCORDANCE WITH THE EROSION CONTROL PLAN OR THE DIRECTIVES OF THE MONTVILLE WETLANDS ENFORCEMENT OFFICER OR THE MONTVILLE ZONING ENFORCEMENT OFFICER ENUNCIATED AT THE PRECONSTRUCTION MEETING, THE APPLICANT SHALL BE REQUIRED TO CEASE ALL CONSTRUCTION ACTIVITIES WITH RESPECT TO THE DEVELOPMENT OF THE PROPOSED GASOLINE/CONVENIENCE STORE FACILITY UNTIL SUCH TIME AS SAID EROSION AND SEDIMENT AND CONTROL MEASURES HAVE BEEN INSTALLED IN ACCORDANCE WITH THE EROSION CONTROL PLAN AND/OR THE DIRECTIVES OF THE MONTVILLE WETLANDS ENFORCEMENT OFFICER OR THE MONTVILLE ZONING ENFORCEMENT OFFICER AND APPROVAL OF THE SAME HAS BEEN CERTIFIED, IN WRITING, BY THE MONTVILLE WETLANDS ENFORCEMENT OFFICER AND THE MONTVILLE ZONING ENFORCEMENT OFFICER.

9. DURING THE STABILIZATION PERIOD (AFTER CONSTRUCTION HAS BEEN COMPLETED, BUT PRIOR TO CERTIFICATION OF APPROVAL THEREOF BY THE MONTVILLE WETLANDS ENFORCEMENT OFFICER AND THE MONTVILLE ZONING ENFORCEMENT OFFICER FOR REMOVAL OF EROSION AND SEDIMENT CONTROL MEASURES) ALL EROSION AND SEDIMENT CONTROL MEASURES SHALL BE MAINTAINED IN PROPER WORKING ORDER AND CONDITION. UNLESS NOTICE OTHERWISE IS PROVIDED TO THE MONTVILLE WETLANDS ENFORCEMENT OFFICER AND THE MONTVILLE ZONING ENFORCEMENT OFFICER, ASIF CHOUDHRY, 96 ROUTE 32, FRANKLIN, CONNECTICUT 06254, (860) 287-7181, ASIFMAN500@GMAIL.COM SHALL BE THE RESPONSIBLE PARTY FOR COMPLIANCE WITH ALL EROSION AND SEDIMENT CONTROL MEASURES AND REQUIREMENTS IN CONJUNCTION WITH CONSTRUCTION ACTIVITIES ON THE PROPERTY. ALL EROSION AND SEDIMENT CONTROL MEASURES SHALL BE INSPECTED, MAINTAINED AND/OR REPAIRED, AS NECESSARY, AS SET FORTH ABOVE.

10. SUBJECT TO PERMITTING REQUIREMENTS, IT IS ANTICIPATED THAT THE CONSTRUCTION OF THE PROPOSED GASOLINE/CONVENIENCE STORE FACILITY SHALL COMMENCE IN THE SPRING OF 2020. IT IS FURTHER ANTICIPATED THAT PROJECT CONSTRUCTION COMPLETION WILL OCCUR BY THE FALL OF 2020.

11. DURING THE STABILIZATION PERIOD, ANY EROSION WHICH OCCURS SHALL BE IMMEDIATELY REPAIRED BY THE APPLICANT, RESEEDED WITH THE SEEDING MIXES SET FORTH IN THE CONSTRUCTION SEQUENCING SECTION OF THIS NARRATIVE AND RE-STABILIZED.

12. ONCE COMPLETE SITE STABILIZATION HAS BEEN ACHIEVED, AND CERTIFICATION THEREOF OBTAINED, IN WRITING, FROM THE MONTVILLE WETLANDS ENFORCEMENT OFFICER AND THE MONTVILLE ZONING ENFORCEMENT OFFICER, ALL EROSION AND SEDIMENT CONTROL MEASURES SHALL BE REMOVED BY THE APPLICANT.

CONSTRUCTION SEQUENCING

1. THE APPLICANT SHALL CLEAR THE AREA FOR SITE DEVELOPMENT. NO GRUBBING SHALL OCCUR UNTIL SUBSEQUENT TO THE INSTALLATION AND INSPECTION OF EROSION AND SEDIMENT CONTROL MEASURES.

2. THE APPLICANT SHALL INSTALL SILT FENCE AROUND THE ENTIRE DOWN GRADIENT AREA OF THE CONSTRUCTION SITE IN THE LOCATION DEPICTED ON THE EROSION CONTROL PLAN. THE SILT FENCE SHALL BE INSTALLED IN ACCORDANCE WITH THE "SILT FENCE" DETAIL DELINEATED ON SHEET 3 OF 11 OF THE PROJECT PLANS.

3. THE APPLICANT SHALL REMOVE SURFACE SOIL AND INSTALL AN ANTI-TRACKING APRON AT THE CONSTRUCTION INTERFACE OF THE ACCESS ROAD TO THE PROPERTY WITH THE HARTFORD-NEW LONDON TURNPIKE (CONNECTICUT ROUTE 85), CONSTRUCTED IN ACCORDANCE WITH THE "ANTI-TRACKING PAD DETAIL" AS DEPICTED ON SHEET 5 OF 11 OF THE PROJECT PLANS.

4. UPON COMPLETION OF INSTALLATION OF EROSION AND SEDIMENT CONTROL MEASURES, THE APPLICANT SHALL CONTACT THE MONTVILLE WETLANDS ENFORCEMENT OFFICER AND THE MONTVILLE ZONING ENFORCEMENT OFFICER TO PERFORM AN INSPECTION OF THE INSTALLATION OF EROSION AND SEDIMENT CONTROL MEASURES. IN NO EVENT SHALL DEMOLITION ACTIVITIES OR MASS SOIL DISTURBANCE AND/OR GRUBBING OCCUR ON THE PROJECT SITE UNTIL SUCH TIME AS THE INSTALLATION OF EROSION AND SEDIMENT CONTROL MEASURES HAS BEEN APPROVED BY THE MONTVILLE WETLANDS ENFORCEMENT OFFICER AND THE MONTVILLE ZONING ENFORCEMENT OFFICER.

5. THE APPLICANT'S CONTRACTOR SHALL DISCONNECT ALL UTILITY SYSTEMS FROM THE EXISTING DWELLING HOUSES LOCATED ON THE PROPERTY. DEMOLITION ACTIVITIES SHALL ONLY OCCUR BETWEEN THE HOURS OF 7:00 A.M. AND 5:00 P.M. ON MONDAY THROUGH FRIDAY, EXCLUDING ANY HOLIDAYS RECOGNIZED IN THE STATE OF CONNECTICUT. SECURITY FENCE SHALL BE MAINTAINED AROUND THE DEMOLITION AREA UNTIL DEMOLITION HAS BEEN COMPLETED AND CELLAR HOLES OR OTHER OBVIOUS HAZARDS HAVE BEEN REMOVED. UPON COMPLETION OF DEMOLITION, SECURITY FENCING SHALL BE REMOVED.

6. UPON APPROVAL OF THE INSTALLATION OF EROSION AND SEDIMENT CONTROL MEASURES, THE TWO (2) EXISTING SINGLE FAMILY DWELLING HOUSES LOCATED ON THE PROPERTY SHALL BE DEMOLISHED WITH CONSTRUCTION EQUIPMENT. ALL CONSTRUCTION DEBRIS GENERATED FROM THE DEMOLITION OF THE DWELLING HOUSES SHALL BE LOADED INTO DUMPSTERS AND REMOVED FROM THE PROPERTY TO AN AUTHORIZED RECEIVER OF CONSTRUCTION DEBRIS.

7. THE NORTHEASTERLY AND EASTERLY PERIPHERY OF THE IMPROVED PROJECT SITE WILL BE RETAINED, EFFECTIVELY SEGREGATING THE IMPROVED PROJECT SITE VERTICALLY FROM THAT PORTION OF THE UPLAND REVIEW AREA BELOW THE BASE OF THE RETAINING WALL ADJACENT TO THE WETLAND SYSTEMS DEPICTED BY WETLAND FLAGS 1-8 AND 1-13 AS DEPICTED ON THE SITE DEVELOPMENT PLAN. THE APPLICANT'S CONTRACTOR SHALL STRIP THE SURFACE SOIL FROM THE AREA FOR THE CONSTRUCTION OF THE RETAINING WALL TO A DEPTH AT WHICH STRUCTURAL MATERIAL HAS BEEN ENCOUNTERED IN ORDER TO SUPPORT THE CONSTRUCTION OF THE RETAINING WALL. THE RETAINING WALL CONCRETE FOOTING SHALL BE FORMED AND POURED IN PLACE. ONCE THE FOOTING HAS CURED, FORMS SHALL BE REMOVED AND THE CONCRETE RETAINING WALL SHALL BE FORMED AND POURED IN PLACE. FOOTING WALL CONSTRUCTION SHALL BE ACCOMPLISHED IN ACCORDANCE WITH THE "RETAINING WALL CROSS SECTION" DETAIL DELINEATED ON SHEET 4 OF 11 OF THE PROJECT PLANS. THE INSTALLATION OF THE RETAINING WALL SHALL EFFECTIVELY SEGREGATE THE CONSTRUCTION SITE FROM THE WETLAND SYSTEMS LOCATED TO THE NORTHEAST AND NORTH OF THE IMPROVED PROJECT SITE AS WELL AS FROM THE UPLAND REVIEW AREA ADJACENT TO SUCH WETLAND SYSTEMS LOCATED SOUTHWESTERLY AND SOUTHERLY OF SAID WETLAND SYSTEMS.

8. SURFACE SOIL STRIPPED FROM THE PROJECT SITE SHALL BE STOCKPILED IN A SURFACE SOIL STOCKPILE AREA AS DEPICTED ON THE EROSION CONTROL PLAN. SURFACE SOIL STOCKPILES SHALL HAVE A SLOPE NOT EXCEEDING 4:1, AND SHALL BE STABILIZED BY SEEDING WITH A PERENNIAL RYEGRASS MIX AND MULCH. THE PERENNIAL RYEGRASS MIX SHALL BE APPLIED AT A RATE OF 40 POUNDS PER ACRE. MULCH SHALL BE APPLIED AT THE RATE OF 80 POUNDS PER 1,000 SQUARE FEET, AND SHALL BE SPREAD BY HAND OR WITH A MULCH BLOWER. SILT FENCE OR STAKED HAY BALES SHALL BE INSTALLED ALONG THE DOWN GRADIENT PERIPHERY OF EACH SURFACE SOIL STOCKPILE LOCATION.

9. THE APPLICANT'S CONTRACTOR SHALL INSTALL THE RIP RAP PREFORMED SCOUR HOLE OUTLET TO ACCOMMODATE THE DISCHARGE OF STORMWATER FROM THE UNDERGROUND STORMWATER DETENTION SYSTEM. THE PREFORMED SCOUR HOLE SHALL BE CONSTRUCTED IN ACCORDANCE WITH THE "PLUNGE POOL" DETAIL AS DEPICTED ON SHEET 5 OF 11 OF THE PROJECT PLANS.

10. THE STORMWATER OUTLET PIPE AND FLARED END SECTION SHALL BE INSTALLED TO INTERCONNECT THE SUBSURFACE STORMWATER DETENTION SYSTEM WITH THE RIP RAP PREFORMED SCOUR HOLE OUTLET PROTECTION ACCORDING TO DETAIL. INSTALL DETENTION POND OVERFLOW TEMPORARY SEDIMENT TRAP BERM IN LOCATION SPECIFIED ON PLAN AS SHOWN ON DETAIL.

11. THE SUBSURFACE STORMWATER DETENTION SYSTEM SHALL BE INSTALLED IN ACCORDANCE WITH THE PROJECT PLANS AS WELL AS OTHER SUBSURFACE INSTALLATIONS DEPICTED ON THE SITE DEVELOPMENT PLAN INCLUDING, BUT NOT LIMITED TO, UNDERGROUND FUEL STORAGE TANKS AND ASSOCIATED PIPING AND CONTAINMENT SYSTEMS AS WELL AS STORMWATER DRAINAGE AND TREATMENT SYSTEMS INCLUDING, BUT NOT LIMITED TO, THE TWO OIL WATER SEPARATORS INCORPORATED INTO THE STORMWATER TREATMENT TRAIN FOR THE PROJECT. SUBSURFACE INSTALLATION SHALL BE INSTALLED AS COMPACTED FILL IS BEING PLACED ON THE PROJECT SIDE OF THE RETAINING WALL, SEQUENTIALLY AS COMPACTED STRUCTURAL MATERIAL IS PLACED TO THE ELEVATION AT WHICH SUCH INSTALLATIONS ARE TO OCCUR AS DEPICTED ON THE SITE DEVELOPMENT PLAN.

12. BUILDING CONSTRUCTION AND OTHER SITE DEVELOPMENT, INCLUDING THE INSTALLATION OF FUELING ISLANDS AND OTHER STRUCTURES SHALL PROCEED. SEQUENTIALLY, THE SUBSURFACE STORMWATER COLLECTION SYSTEM SHALL BE INSTALLED. AS CATCH BASINS ARE INSTALLED IN CONJUNCTION WITH THE SITE DEVELOPMENT OF THE PROPERTY, SILT SACKS OR THEIR EQUIVALENT SHALL BE INSTALLED IN EACH CATCH BASIN IN ORDER TO PREVENT THE INTRODUCTION OF SEDIMENT FROM AN UNSTABILIZED SITE INTO THE STORMWATER COLLECTION, STORAGE AND DISCHARGE SYSTEM.

13. THE NORTHWESTERLY PORTION OF THE PROJECT SITE SHALL BE GRADED IN ACCORDANCE WITH THE SITE DEVELOPMENT PLAN.

14. THE NORTHWESTERLY EMBANKMENT SLOPE SHALL BE STABILIZED BY SPREADING STOCKPILED SURFACE SOIL AT A THICKNESS OF NOT LESS THAN 4". AREAS TO BE SEEDED WILL BE PREPARED BY SPREADING GROUND LIME STONE EQUIVALENT TO 50% CALCIUM PLUS MAGNESIUM OXIDE APPLIED AT A RATE OF 50 POUNDS PER 1,000 SQUARE FEET. FERTILIZER (10-10-10) IS TO BE APPLIED AT A RATE OF 7.5 POUNDS PER 1,000 SQUARE FEET. FOLLOWING THE INITIAL APPLICATION OF LIME AND FERTILIZER, THERE ARE TO BE NO PERIODIC APPLICATIONS OF LIME AND FERTILIZER.

15. THE NORTHERLY EMBANKMENT SLOPE SHALL BE STABILIZED BY THE INSTALLATION OF NORTH AMERICAN GREEN S150 OR APPROVED EQUAL EROSION CONTROL BLANKET INSTALLED IN ACCORDANCE WITH THE EROSION CONTROL BLANKET SLOPE INSTALLATION DETAIL AS DEPICTED ON SHEET 5 OF 10 OF THE SITE DEVELOPMENT PLAN.

16. THE MANEUVERING AISLES AND PARKING AREAS SHALL BE PREPARED FOR BEARING COAT APPLICATION BY INSTALLING NOT LESS THAN 12" OF COMPACTED BANKRUN GRAVEL SUBBASE, COVERED BY NOT LESS THAN 6" OF COMPACTED PROCESSED GRAVEL BASE MATERIAL AND THEREAFTER FINISHED WITH A 2 COAT APPLICATION OF 3" OF COMPACTED CLASS 2 BITUMINOUS CONCRETE PLACED IN 1.5" LIFTS IN ACCORDANCE WITH THE BITUMINOUS PAVEMENT DETAIL DELINEATED ON SHEET 7 OF THE 11 OF THE PROJECT PLANS.

17. BITUMINOUS CONCRETE LIP CURBING SHALL BE INSTALLED IN THE AREAS DEPICTED ON THE SITE DEVELOPMENT PLAN.

18. DISTURBED AREAS OF THE SITE NOT PROPOSED FOR PAVEMENT, AND SPECIFICALLY EXCLUDING THE NORTHWESTERLY EMBANKMENT SLOPE, SHALL BE STABILIZED BY SPREADING STOCKPILED SURFACE SOIL OVER THESE AREAS AT A THICKNESS OF NOT LESS THAN 4". THESE AREAS SHALL BE PREPARED FOR SEEDING BY SPREADING GROUND LIME STONE EQUIVALENT TO 50% CALCIUM PLUS MAGNESIUM OXIDE APPLIED AT A RATE OF 50 POUNDS PER 1,000 SQUARE FEET. FERTILIZER (10-10-10) IS TO BE APPLIED AT A RATE OF 7.5 POUNDS PER 1,000 SQUARE FEET. FOLLOWING THE INITIAL APPLICATION OF LIME AND FERTILIZER, THERE ARE TO BE NO PERIODIC APPLICATIONS OF LIME AND FERTILIZER. THESE AREAS WILL BE SEEDED WITH A SEEDING MIX OF KENTUCKY BLUEGRASS APPLIED AT A RATE OF 100 POUNDS PER ACRE, CREEPING RED FESCUE APPLIED AT A RATE OF 100 POUNDS PER ACRE AND PERENNIAL RYEGRASS APPLIED AT A RATE OF 20 POUNDS PER ACRE FOR A TOTAL APPLICATION OF 220 POUNDS PER ACRE. A HYDROSEED MIX USING COMPARABLE CULTIVARS SHALL BE A SUITABLE SUBSTITUTE. IN THE EVENT THAT A HYDROSEED MIX IS NOT UTILIZED, AFTER SEEDING, THE AREAS SEEDED SHALL BE STABILIZED WITH HAY MULCH IMMEDIATELY APPLIED AT A RATE OF 70 POUNDS PER 1,000 SQUARE FEET AND ANCHORED BY TRACKING. SEEDING SHALL ONLY OCCUR BETWEEN APRIL 15 AND JUNE 15 AND AUGUST 15 TO OCTOBER 1.

19. ONCE ALL DISTURBED AREAS HAVE BEEN THOROUGHLY STABILIZED, EROSION AND SEDIMENT CONTROL MEASURES SHALL BE REMOVED, INCLUDING THE REMOVAL OF ALL SILT SACKS FROM CATCH BASINS WITHIN THE PROJECT AREA.

MAINTENANCE SCHEDULE

THE APPLICANT INCORPORATES THE FOLLOWING MAINTENANCE SCHEDULE INTO ANY PERMIT OR LICENSE GRANTED BY THE MONTVILLE INLAND WETLANDS AND WATERCOURSES COMMISSION IN CONJUNCTION WITH THE DEVELOPMENT, USE OR OPERATION OF THE PROPOSED GASOLINE/CONVENIENCE STORE FACILITY LOCATED AT 1499 AND 1505 HARTFORD-NEW LONDON TURNPIKE (CONNECTICUT ROUTE 85) IN ORDER TO INSURE THAT THE STORMWATER COLLECTION AND WATER QUALITY MEASURES INCORPORATED INTO THE PROJECT DESIGN COMPLY WITH OR EXCEED THE 2004 WATER QUALITY GUIDELINES PROMULGATED BY THE STATE OF CONNECTICUT DEPARTMENT OF ENERGY AND ENVIRONMENTAL PROTECTION ARE MAINTAINED THROUGHOUT THE LIFE OF THE PROJECT.

CONSTRUCTION PERIOD MAINTENANCE.

1. SILT FENCE AND/OR WOOD CHIP BERMS SHALL BE INSPECTED IN ACCORDANCE WITH THE GENERAL PROCEDURES SECTION OF THIS NARRATIVE AND REPAIRED AND MAINTAINED AS NECESSARY. AT ANY TIME THAT SEDIMENT REACHES 1/3 THE HEIGHT OF THE SILT FENCE OR THE WOOD CHIP BERM, THE SEDIMENT SHALL BE REMOVED AND UTILIZED AS SITE FILL IN FILL AREAS ON THE PROJECT SITE.

2. AS THE SUBSURFACE STORMWATER COLLECTION AND DETENTION SYSTEM IS BEING INSTALLED, AND AS SITE FILL IS BEING PLACED IN CONJUNCTION WITH THE GRADING OF THE RETAINED PROJECT SITE, THE STORMWATER COLLECTION AND DETENTION SYSTEM SHALL BE INSPECTED AFTER EACH STORM EVENT RESULTING IN THE DEPOSITION OF IN EXCESS OF 0.10" OF PRECIPITATION AND CLEANED AS NECESSARY.

3. SILT SACKS SHALL BE INSPECTED WEEKLY AND AFTER EVERY STORM EVENT RESULTING IN THE DEPOSITION OF MORE THAN 0.10" OF PRECIPITATION AND CLEANED AS NECESSARY. IF ANY INSPECTION DISCLOSES ANY BREACH IN A SILT SACK, THE SILT SACK SHALL BE REPLACED IMMEDIATELY.

PERMANENT MAINTENANCE SCHEDULE

1. ALL PARKING AREAS, ROADWAYS, SIDEWALKS, DRIVEWAYS AND OTHER IMPERVIOUS AREAS (OTHER THAN ROOFTOPS) SHALL BE SWEPT CLEAN OF SAND, LITTER AND OTHER POSSIBLE POLLUTANTS TWICE EACH YEAR, ONCE BETWEEN NOVEMBER 14 AND DECEMBER 15 (AFTER LEAF FALL HAS CONCLUDED) AND ONCE DURING THE MONTH OF APRIL (AFTER THE POSSIBILITY OF FURTHER SANDING HAS ENDED). ALL MATERIAL ACCUMULATED AS A RESULT OF THE SWEEPING ACTIVITIES SHALL BE DISPOSED OF IN ACCORDANCE WITH LAW.

2. ALL CATCH BASIN SUMPS SHALL BE INSPECTED TWICE YEARLY AND SHALL BE CLEANED WHEN THE LEVEL OF SEDIMENT REACHES 1' BELOW THE INVERT OF THE DISCHARGE PIPE FROM THE CATCH BASIN. ANY REMOVED SEDIMENT SHALL BE TREATED AS REGULATED WASTE AND DISPOSED OF IN ACCORDANCE WITH LAW BY A DULY AUTHORIZED REGULATED WASTE HAULER.

3. EACH OIL WATER SEPARATOR SHALL BE INSPECTED TWICE ANNUALLY DURING THE PERIOD NOVEMBER 15 - DECEMBER 15 AND APRIL 15 - MAY 15 AND CLEANED AS NECESSARY. ANY MATERIAL REMOVED FROM THE OIL WATER SEPARATORS SHALL BE DISPOSED OF IN ACCORDANCE WITH LAW. THE OIL WATER SEPARATORS SHALL BE CLEANED BY A LICENSED ENVIRONMENTAL WASTE MANAGEMENT COMPANY.

4. DURING THE FIRST TWO (2) YEARS SUBSEQUENT TO THE COMPLETION OF THE PROJECT, AFTER EVERY STORM EVENT RESULTING IN THE DEPOSITION OF IN EXCESS OF 1" OF RAINFALL, THE APPLICANT SHALL INSPECT THE NORTHWESTERLY EMBANKMENT SLOPE FOR CHANNELIZATION. THEREAFTER, AFTER EACH STORM EVENT EQUALING OR EXCEEDING THE TWO (2) YEAR STORM EVENT, THE APPLICANT SHALL INSPECT THE NORTHWESTERLY EMBANKMENT SLOPE FOR CHANNELIZATION. IF CHANNELIZATION IS OCCURRING, THE APPLICANT SHALL IMMEDIATELY RETAIN THE SERVICES OF A CERTIFIED SOIL AND EROSION CONTROL SPECIALIST IN ORDER TO DESIGN REMEDIAL MEASURES TO DIFFUSE THE FLOW CAUSING THE CHANNELIZATION AND SHALL FORTHWITH IMPLEMENT THE REMEDIAL MEASURES DESIGNED BY THE SOIL AND EROSION CONTROL SPECIALIST.

SEDIMENTATION AND EROSION CONTROL MEASURES

1. CLEAR TREES, BRUSH FROM AREA TO BE GRADED.
2. INSTALL SILT FENCE EROSION BARRIER (SEE PLAN).
3. FILL AND GRADE ONLY THOSE AREAS SHOWN ON PLAN.
4. REMOVE ALL STONES, STUMPS, ETC. FROM GRADED AREA, THEN PLACE LOAM TO A DEPTH OF 4" OR MORE.
5. DURING SEED BED PREPARATION, APPLY FERTILIZER AT THE RATE OF 7.5 LBS. PER 1000 SQUARE FEET USING 10-10-10 OR EQUIVALENT.
6. SEED ALL EXPOSED AREAS WITH THE FOLLOWING SEED MIXTURE:
   KENTUCKY BLUEGRASS 2.25 LBS/1000 SQ. FT.
   CREEPING RED FESCUE 2.25 LBS/1000 SQ. FT.
   PERENNIAL RYEGRASS .50 LBS/1000 SQ. FT.
7. AFTER SEEDING, MULCH SHOULD BE APPLIED TO EXPOSED AREAS. STRAW AND HAY MULCHES REQUIRE ANCHORING. THIS MAY BE ACCOMPLISHED BY THE USE OF A MULCHING ANCHORING TOOL, LIQUID MULCH BINDER, OR BY DRIVING TRACKED EQUIPMENT UP AND DOWN THE SLOPE KEEPING THE TRACK CLEATS PERPENDICULAR TO THE SLOPE.
8. WHERE VEGETATIVE COVER HAS NOT BEEN ESTABLISHED PRIOR TO OCTOBER 30, APPLY JUTE MESH AS PER CONNECTICUT GUIDELINES FOR SOIL EROSION AND SEDIMENT CONTROL.
9. ALL INSTALLED SEDIMENTATION AND EROSION CONTROL MEASURES MUST BE MAINTAINED UNTIL THE AREA IS ESTABLISHED. INSPECTIONS SHOULD BE MADE AT LEAST ONCE A WEEK AND AFTER EACH RAIN.

DELINEATION OF NO FEASIBLE AND PRUDENT ALTERNATIVES

IN THE EVENT THAT THE TOWN OF MONTVILLE INLAND WETLANDS AND WATERCOURSES COMMISSION DEEMS THE PROPOSED DEVELOPMENT OF THE GASOLINE/CONVENIENCE STORE FACILITY AS DELINEATED ON THE SITE DEVELOPMENT PLAN, AS AN ACTIVITY WHICH COULD HAVE A SIGNIFICANT IMPACT ON WETLANDS AND WATERCOURSES, IT IS THE OBLIGATION OF THE APPLICANT TO DEMONSTRATE TO THE MONTVILLE INLAND WETLANDS AGENCY THAT NO FEASIBLE AND PRUDENT ALTERNATIVE EXISTS TO THE PROPOSED REGULATED ACTIVITIES WHICH THE APPLICANT INTENDS TO CONDUCT IN UPLAND REVIEW AREAS ADJACENT TO WETLANDS IN CONJUNCTION WITH THE DEVELOPMENT, USE AND OPERATION OF THE PROJECT.

AS DEFINED IN CONNECTICUT GENERAL STATUTES §22A-38(17) "FEASIBLE" MEANS ABLE TO BE CONSTRUCTED OR IMPLEMENTED CONSISTENT WITH SOUND ENGINEERING PRINCIPLES. AS DEFINED IN §22A-38(18) OF THE CONNECTICUT GENERAL STATUTES, "PRUDENT" MEANS ECONOMICALLY OR OTHERWISE REASONABLE IN LIGHT OF THE SOCIAL BENEFITS TO BE DERIVED FROM THE PROPOSED REGULATED ACTIVITY PROVIDED COST MAY BE CONSIDERED IN DECIDING WHAT IS PRUDENT AND FURTHER PROVIDED A MERE SHOWING OF EXPENSE WILL NOT NECESSARILY SHOW AN ALTERNATIVE IS IMPRUDENT.

AS DELINEATED IN THE APPLICATION TO THE MONTVILLE INLAND WETLANDS AND WATERCOURSES COMMISSION, THE PROJECT SITE, FOR DEVELOPMENT, WILL REQUIRE THE COMBINATION OF TWO (2) EXISTING SEPARATE AND DISTINCT TRACTS OR PARCELS OF LAND, COMMONLY KNOWN AND DESIGNATED AS 1499 HARTFORD-NEW LONDON TURNPIKE OWNED OF RECORD BY ASIF CHOUDHRY AND 1505 HARTFORD-NEW LONDON TURNPIKE OWNED OF RECORD BY DEER RUN STABLE, LLC. BOTH PARCELS CONTAIN APPROXIMATELY 1 ACRE IN SIZE. MUNICIPAL WATER AND MUNICIPAL SEWER ARE NOT AVAILABLE TO FOSTER DEVELOPMENT IN THE CONNECTICUT ROUTE 85 CORRIDOR.

AS DEPICTED ON THE SITE DEVELOPMENT PLAN, NEARLY 50% OF THE EASTERLY PARCEL IS ENCUMBERED BY INLAND WETLAND SOILS. IN ADDITION, THE NORTHWESTERLY CORNER OF THE WESTERLY PARCEL IS ALSO ENCUMBERED BY INLAND WETLAND SOILS. PURSUANT TO THE ZONING REGULATIONS AND ZONING MAP PROMULGATED BY THE TOWN OF MONTVILLE PLANNING AND ZONING COMMISSION, THESE COMBINED PROPERTIES HAVE BEEN DESIGNATED AS PROPERTIES ZONED FOR COMMERCIAL USE. THE HARTFORD-NEW LONDON TURNPIKE (CONNECTICUT ROUTE 85) IS AN ARTERIAL HIGHWAY SYSTEM WITHIN THE TOWN OF MONTVILLE AND AN AREA DESIGNATED BY THE TOWN OF MONTVILLE PLAN OF CONSERVATION AND DEVELOPMENT AS AN AREA WHERE COMMERCIAL DEVELOPMENT SHOULD BE ENCOURAGED.

COMMERCIAL DEVELOPMENT ON THE EASTERLY PARCEL, IN AND OF ITSELF, IS NOT FEASIBLE DUE TO THE LIMITED AREA OF THE SITE AVAILABLE FOR DEVELOPMENT WITHOUT INCURRING DIRECT IMPACTS TO THE INLAND WETLAND SYSTEM LOCATED IN THE NORTHERLY AREA OF THAT LOT. IT IS ONLY BY COMBINING THE TWO LOTS INTO ONE SINGULAR TRACT OR PARCEL OF LAND THAT COMMERCIAL DEVELOPMENT BECOMES FEASIBLE GIVING DUE CONSIDERATION TO THE FACT THAT IT IS NECESSARY FOR THE SITE TO ACCOMMODATE AN ON-SITE SEPTIC SYSTEM AND POTABLE WATER SUPPLY WELL WHICH CONFORMS TO THE REQUIREMENTS OF THE CONNECTICUT PUBLIC HEALTH CODE.

IT IS NOT FEASIBLE TO PROPOSE DEVELOPMENT OF THESE PROPERTIES FOR A USE WHICH IS NOT PERMITTED IN THE C-1 ZONING DISTRICT. IT IS ONLY BY A COMBINATION OF THE TWO SEPARATE AND DISTINCT PARCELS THAT THE PARCELS ATTAIN SUFFICIENT UPLAND AREA IN ORDER TO MAKE COMMERCIAL DEVELOPMENT VIABLE. DUE TO THE LIMITED AVAILABILITY OF UPLAND AREA ON THE COMBINED PARCELS, COUPLED WITH THE NEED TO ACCOMMODATE AN ON-SITE SUBSURFACE SEWAGE DISPOSAL SYSTEM, POTABLE WATER SUPPLY WELL AND PARKING, THERE ARE FEW COMMERCIAL USES WHICH ARE ECONOMICALLY VIABLE ON SUCH LIMITED DEVELOPABLE AREA. HOWEVER, A GASOLINE/CONVENIENCE STORE FACILITY DOES FIT AND HAS ECONOMIC VIABILITY ON AN ARTERIAL ROAD. IT IS THE VERY TYPE OF LIMITED USE FOR THIS PROPERTY WHICH MEETS THE "PRUDENT" TEST. THE APPLICANT, AND ITS CONSULTING ENGINEER AND ENVIRONMENTAL CONSULTANT, HAVE FORMULATED A SITE DEVELOPMENT METHODOLOGY WHICH RESULTS IN NO DIRECT IMPACT TO INLAND WETLANDS ON AND ADJACENT TO THE PROPERTY BEING DEVELOPED. THE APPLICANT'S ENGINEER HAS CONSIDERED OTHER DEVELOPMENT METHODOLOGIES, SUCH AS, BUT NOT LIMITED TO, GRADING OF THE ENTIRE SITE RATHER THAN RETAINING THE NORTHEASTERLY PORTION OF THE SITE. HOWEVER, ALL OTHER DEVELOPMENT METHODOLOGIES WOULD RESULT IN DIRECT IMPACTS TO INLAND WETLANDS.

BY RETAINING THE IMPROVED SITE, THE APPLICANT'S ENGINEER HAS EFFECTIVELY SEGREGATED THE DEVELOPED AREA, BOTH DURING CONSTRUCTION, AND AFTER COMPLETION OF CONSTRUCTION DURING COMMERCIAL OPERATION, FROM THE ADJACENT WETLAND SYSTEMS TO THE NORTHEAST AND NORTH. THE RETAINED DEVELOPMENT SITE WILL BE VERTICALLY AT AN ELEVATION 6' OR MORE HIGHER THAN THAT OF THE ADJACENT WETLAND SYSTEMS AND THE SITE WILL BE GRADED IN ORDER TO PREVENT FLOW OF UNTREATED STORMWATER OFF OF THE IMPROVED PROJECT SITE TO THE ADJACENT WETLAND SYSTEM. THE STORMWATER COLLECTION SYSTEM INCORPORATES INTO THE TREATMENT TRAIN FOR THE STORMWATER FALLING ON THE SITE THREE SEPARATE AND DISTINCT METHODOLOGIES TO ACCOMPLISH STORMWATER TREATMENT. FIRST, ALL CATCH BASINS INCORPORATED INTO THE PROJECT DESIGN WILL HAVE DEEP SUMPS TO CAPTURE SAND, SEDIMENT AND OTHER DEBRIS AND RETAIN THE SAME IN THE TREATMENT TRAIN.

SECOND, THE DESIGN ENGINEER HAS INCORPORATED INTO THE TREATMENT TRAIN TWO (2) OIL WATER SEPARATORS IN ORDER TO CAPTURE ANY POLLUTANTS WHICH MAY FALL OR SPILL ON THE PAVED PARKING AND MANEUVERING LANE AREAS OF THE PROJECT SITE AND RETAIN THE SAME FOR DISPOSAL IN ACCORDANCE WITH THE MAINTENANCE SCHEDULE. THIRD, THE DESIGN ENGINEER HAS PLACED THE RIP RAP PREFORMED SCOUR HOLEFOR STORMWATER DISCHARGE IN A LOCATION WHICH WILL ATTAIN VEGETATIVE TREATMENT OF THE DISCHARGED STORMWATER BEFORE THE STORMWATER REACHES THE ADJACENT WETLANDS SYSTEM. IT SHOULD BE NOTED THAT WHILE THE RIP RAP PREFORMED SCOUR HOLEIS SPECIFIED FOR INSTALLATION ADJACENT WESTERLY TO WETLAND FLAG 5, THE DIRECTION OF FLOW OF STORMWATER OUTLETTING THE RIP RAP PREFORMED SCOUR HOLEWILL BE IN THE DIRECTION OF WETLAND FLAG 7-8, THEREBY ATTAINING SIGNIFICANT GROUND AND VEGETATION CONTACT BEFORE REACHING THE WETLAND SYSTEM.

IT SHOULD ALSO BE NOTED THAT THE REGULATIONS GOVERNING THE INSTALLATION AND USE OF UNDERGROUND STORAGE TANKS AND THE PUMPING AND PIPING OF PETROLEUM PRODUCTS FROM THE UNDERGROUND STORAGE TANKS TO THE FUEL DISPENSERS ARE REQUIRED TO CONTAIN REDUNDANT SAFEGUARDS TO PREVENT AN UNCONTROLLED DISCHARGE OF PETROLEUM PRODUCT TO THE ENVIRONMENT, INCLUDING, BUT NOT LIMITED TO, THE REQUIREMENT THAT ALL UNDERGROUND STORAGE TANKS BE DOUBLE WALLED WITH INTERSTITIAL SENSORS WHICH WILL SHUT DOWN THE SYSTEM IF THERE IS A BREACH OF EITHER THE INNER OR OUTER WALL AS WELL AS AUTOMATED LEAK DETECTION SENSORS IN THE PIPING AND DISPENSING SYSTEM WHICH AGAIN, WILL AUTOMATICALLY SHUT THE SYSTEM DOWN IF ANY LEAK IS DETECTED.

THE DESIGN OF THE PROJECT, INCLUDING THE CONSTRUCTION OF THE PROJECT RETAINING WALL AS THE FIRST ELEMENT OF CONSTRUCTION OF THE PROJECT (SUBSEQUENT TO DEMOLITION) EFFECTIVELY SEGREGATES THE IMPROVED PROJECT SITE FROM THE ADJACENT WETLAND VERTICALLY DURING THE ENTIRE CONSTRUCTION PROCESS, THEREBY PROVIDING A LEVEL OF PROTECTION WHICH CANNOT BE ATTAINED BY THE UTILIZATION OF CUSTOMARY SOIL AND EROSION CONTROL DEVICES. THE VERTICAL SEPARATION OF THE IMPROVED PROJECT SITE FROM THE ADJACENT WETLAND, AND THE CAPTURE OF STORMWATER RUNOFF ON THE IMPERVIOUS PORTIONS OF THE PROJECT SITE, INCLUDING THE DIRECTION OF THE SAME THROUGH A REDUNDANT STORMWATER TREATMENT TRAIN WILL PREVENT THE DISCHARGE OF UNTREATED STORMWATER TO THE ADJACENT WETLAND SYSTEMS. FINALLY, THE UTILIZATION OF REGULATORILY REQUIRED BEST MANAGEMENT PRACTICES FOR THE INSTALLATION OF PETROLEUM STORAGE AND DISPENSING FACILITIES WILL INSURE THAT THERE WILL BE NO DISCHARGE OF PETROLEUM PRODUCTS OR RELATED POLLUTANTS TO THE ENVIRONMENT.

SEDIMENTATION AND EROSION CONTROL PLAN

STUART J. FAIRBANK
CONN. P.E. #20206

BOUNDARY LINES OF ADJOINING PROPERTIES ARE SHOWN FOR GENERAL INFORMATIONAL PURPOSES ONLY AND ARE NOT TO BE CONSTRUED AS BEING ACCURATELY LOCATED OR DEPICTED.

©2019 – ANGUS McDONALD / GARY SHARPE & ASSOCIATES, INC.

THESE DRAWINGS ARE THE PROPERTY OF ANGUS MCDONALD/GARY SHARPE & ASSOCIATES, INC. AND HAVE BEEN SPECIFICALLY PREPARED FOR THE OWNER OF THIS PROJECT OR PROPERTY, THEY ARE NOT TO BE DUPLICATED OR USED IN PART OR WHOLE FOR ANY OTHER PURPOSE, PROJECT, LOCATION OR OWNER WITHOUT THE EXPRESS WRITTEN CONSENT OF ANGUS MCDONALD/GARY SHARPE & ASSOCIATES, INC.

THE WORD "CERTIFY", AS USED IS UNDERSTOOD TO BE AN EXPRESSION OF PROFESSIONAL OPINION BY THE ENGINEER OR SURVEYOR. IT IS A DECLARATORY STATEMENT WHICH IS BASED ON HIS BEST KNOWLEDGE, INFORMATION AND BELIEF. AS SUCH IT CONSTITUTES NEITHER GUARANTEE NOR WARRANTY, EXPRESSED OR IMPLIED, OF ANY INFORMATION CONTAINED HEREON. NO CERTIFICATION IS EXPRESSED OR IMPLIED ON ANY ORIGINAL OR ANY DUPLICATE OF THIS PLAN UNLESS IT BEARS AN ORIGINAL STAMP OR SEAL AND ORIGINAL SIGNATURE OF THE INDIVIDUAL WHOSE REGISTRATION NUMBER APPEARS HEREON.

LAND & MARINE – ENGINEERING – SURVEYING – PLANNING

ANGUS McDONALD
GARY SHARPE
& ASSOCIATES, INC.
SINCE 1966

P.O. BOX 608, 233 BOSTON POST ROAD
OLD SAYBROOK, CONNECTICUT 06475
TEL. (860) 388-4671 FAX (860) 388-3962

SITE DEVELOPMENT PLAN
PREPARED FOR
DEER RUN STABLE, LLC
1499 & 1505 HARTFORD NEW LONDON TURNPIKE
OAKDALE/MONTVILLE, CONNECTICUT

DATE: JULY 10, 2019		SCALE: 1"=20'
DR'N DO'D	CK'D	APP'D
SHEET 4 of 11		JOB NO. 186333

REVISIONS: 1/13/20 REVISED PER COMMENTS, 2-20-20 UPDATED, 2-27-20 PER TOWN PLANNER, 3-11-20

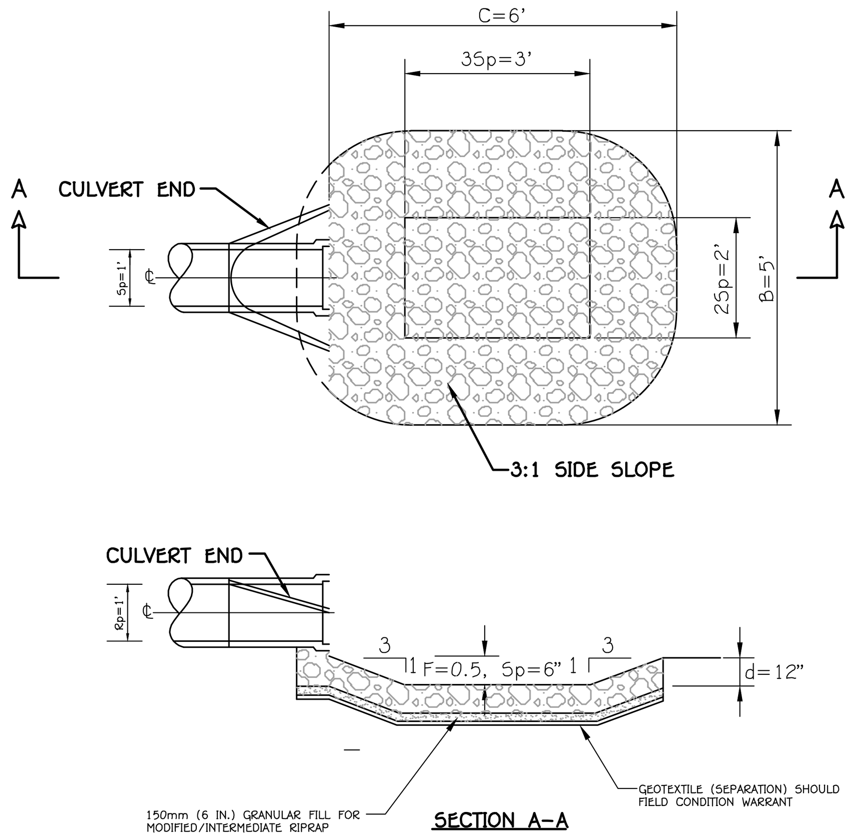

LEGEND

Sp=MAX. INSIDE PIPE SPAN (NON-CIRCULAR SECTIONS) INSIDE PIPE DIAMETER (CIRCULAR SECTIONS)

Rp=MAX. INSIDE PIPE RISE (NON-CIRCULAR SECTIONS) INSIDE PIPE DIAMETER (CIRCULAR SECTIONS)

d=300mm (12 IN.) MODIFIED RIPRAP

TYPE 1 F=0.5 Rp

TYPE I PREFORMED SCOUR HOLE

(NOT TO SCALE)

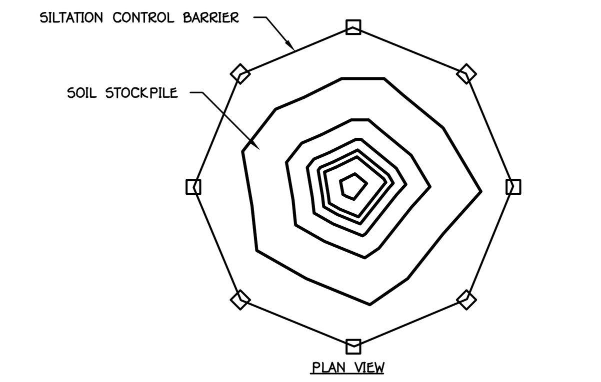

NOTE:
IF STOCKPILE IS TO EXIST FOR MORE THAN 15 DAYS, SURFACES SHALL BE SEEDED WITH GRASS MIXTURE FOR STABLIZATION.

STOCKPILE SILTATION CONTROL

N.T.S.

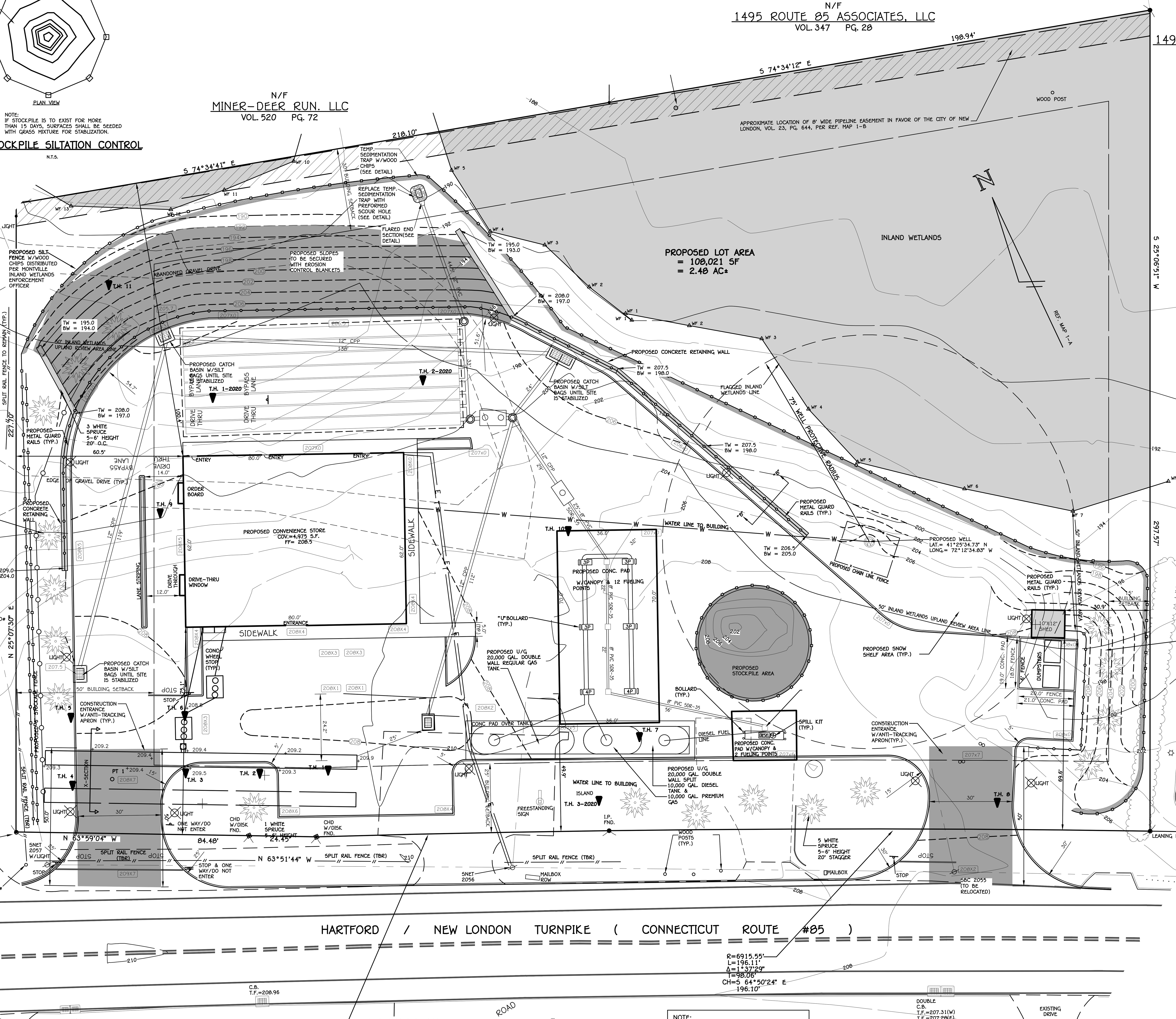

TABLE OF DIMENSIONS								
D	T	A	B	C	E	L	H:V	WT.
15"	2-1/4"	6"	2'-3"	3'-10"	2'-0"	6'-1"	3:1	730

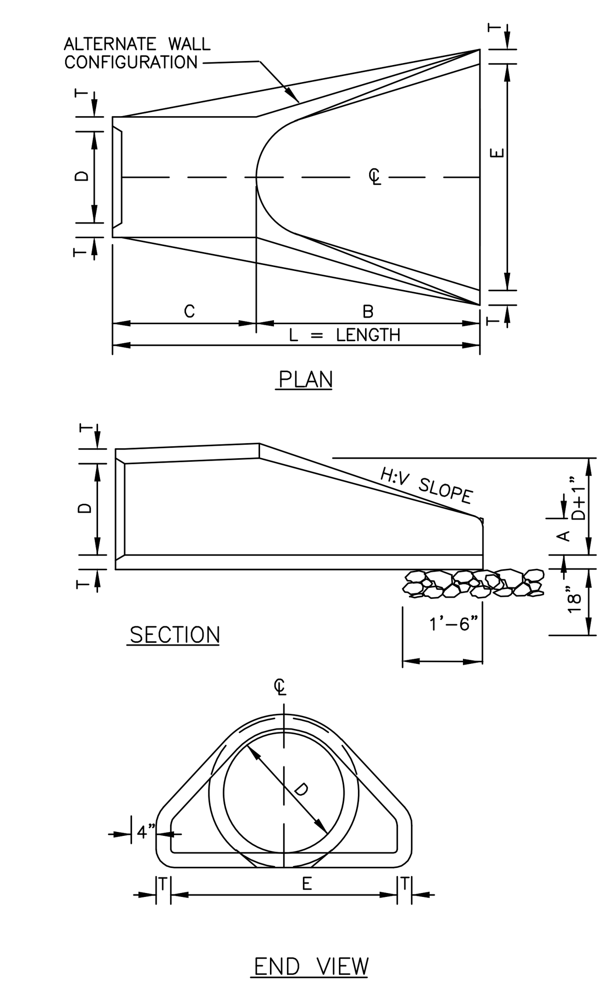

FLARED END SECTION

(NOT TO SCALE)

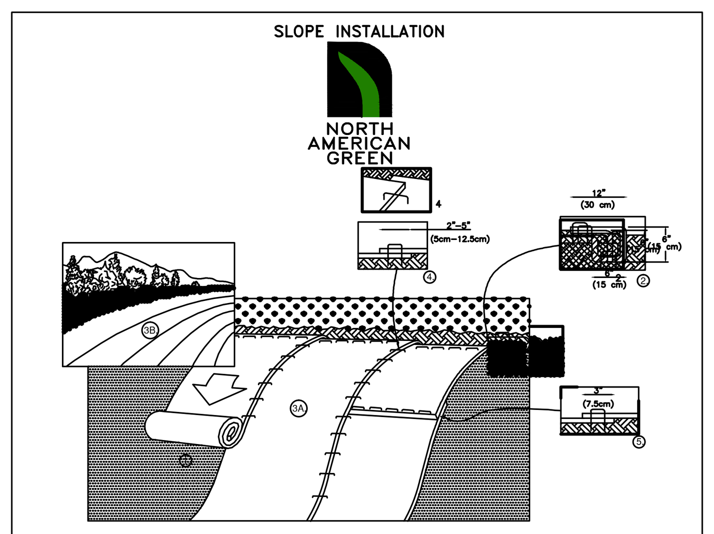

1. PREPARE SOIL BEFORE INSTALLING BLANKETS, INCLUDING ANY NECESSARY APPLICATION OF LIME, FERTILIZER, AND SEED. NOTE: WHEN USING CELL-O-SEED DO NOT SEED PREPARED AREA. CELL-O-SEED MUST BE INSTALLED WITH PAPER SIDE DOWN.
2. BEGIN AT THE TOP OF THE SLOPE BY ANCHORING THE BLANKET IN A 6" (15cm) DEEP X 6" (15cm) WIDE TRENCH WITH APPROXIMATELY 12" (30cm) OF BLANKET EXTENDED BEYOND THE UP-SLOPE PORTION OF THE TRENCH. ANCHOR THE BLANKET WITH A ROW OF STAPLES/STAKES APPROXIMATELY 12" (30cm) APART IN THE BOTTOM OF THE TRENCH. BACKFILL AND COMPACT THE TRENCH AFTER STAPLING. APPLY SEED TO COMPACTED SOIL AND FOLD REMAINING 12" (30cm) PORTION OF BLANKET BACK OVER SEED AND COMPACTED SOIL. SECURE BLANKET OVER COMPACTED SOIL WITH A ROW OF STAPLES/STAKES SPACED APPROXIMATELY 12" (30cm) APART ACROSS THE WIDTH OF THE BLANKET.
3. ROLL THE BLANKETS (A.) DOWN OR (B.) HORIZONTALLY ACROSS THE SLOPE. BLANKETS WILL UNROLL WITH APPROPRIATE SIDE AGAINST THE SOIL SURFACE. ALL BLANKETS MUST BE SECURELY FASTENED TO SOIL SURFACE BY PLACING STAPLES/STAKES IN APPROPRIATE LOCATIONS AS SHOWN IN THE STAPLE PATTERN GUIDE. WHEN USING OPTIONAL DOT SYSTEM™, STAPLES/STAKES SHOULD BE PLACED THROUGH EACH OF THE COLORED DOTS CORRESPONDING TO THE APPROPRIATE STAPLE PATTERN.
4. THE EDGES OF PARALLEL BLANKETS MUST BE STAPLED WITH APPROXIMATELY 2"-5" (5cm-12.5cm) OVERLAP DEPENDING ON BLANKET TYPE. TO ENSURE PROPER SEAM ALIGNMENT, PLACE THE EDGE OF THE OVERLAPPING BLANKET (BLANKET BEING INSTALLED ON TOP) EVEN WITH THE COLORED SEAM STITCH ON THE PREVIOUSLY INSTALLED BLANKET.
5. CONSECUTIVE BLANKETS SPLICED DOWN THE SLOPE MUST BE PLACED END OVER END (SHINGLE STYLE) WITH AN APPROXIMATE 3" (7.5cm) OVERLAP. STAPLE THROUGH OVERLAPPED AREA, APPROXIMATELY 12" (30cm) APART ACROSS ENTIRE BLANKET WIDTH.

CRITICAL POINTS:
A. OVERLAPS AND SEAMS
B. PROJECTED WATER LINE
C. CHANNEL BOTTOM/SIDE SLOPE VERTICES

NOTE:
*HORIZONTAL STAPLE SPACING SHOULD BE ALTERED IF NECESSARY TO ALLOW STAPLES TO SECURE THE CRITICAL POINTS ALONG THE CHANNEL SURFACE.
**IN LOOSE SOIL CONDITIONS, THE USE OF STAPLE OR STAKE LENTHS IN EXCESS OF 6" (15 CM) MAY BE NECESSARY TO PROPERLY ANCHOR THE BLANKETS.

14649 HIGHWAY 41 NORTH, EVANSVILLE, INDIANA 47725
USA 1-800-772-2040 CANADA 1-800-448-2040
www.nagreen.com

EROSION CONTROL BLANKET DETAIL

NOT TO SCALE

LEGEND

- UTILITY POLE
- CHD — CONN. HIGHWAY DEPT. MONUMENT
- CONC. MON. — CONCRETE MONUMENT
- M.S. — MERESTONE
- FND. — FOUND
- I.PIN — IRON PIN
- I.P. — IRON PIPE
- D.H. — DRILL HOLE
- SILT FENCE
- STOCKADE FENCE
- SPLIT RAIL FENCE
- 00 — EXISTING CONTOURS
- +0.00 — EXISTING SPOT ELEVATION
- STONEWALL
- FIRE HYDRANT
- 00 — EDGE OF WETLAND/FLAG NUMBER
- TH — DEEP TEST HOLE LOCATION
- PT — PERCOLATION TEST LOCATION
- EDGE OF TREELINE
- SOIL TYPE BOUNDARY
- HKC — SOIL TYPE SYMBOL
- +00.00 — PROPOSED SPOT ELEVATION
- (00) — PROPOSED CONTOUR
- RETAINING WALL
- TBR — TO BE REMOVED
- BCLC — BITUMINOUS CONCRETE LIP CURBING
- W.S.O. — WATER SHUTOFF
- W.G. — WATER GATE

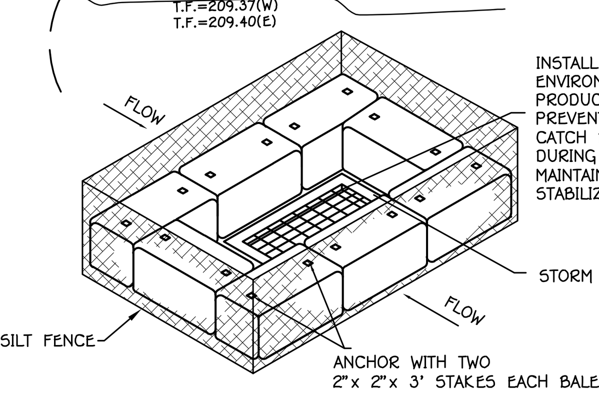

INSTALL "SILT SACK" BY ACF ENVIRONMENTAL OR EQUAL PRODUCT DESIGNED TO PREVENT SILTATION TO CATCH BASIN OVER GRATE DURING CONSTRUCTION AND MAINTAIN UNTIL SITE HAS BEEN STABILIZED

HAYBALE INSTALLATION AT CATCH BASINS

N.T.S.

ANTI-TRACKING APRON TO EXTEND OVER FULL WIDTH OF PROPOSED ROAD

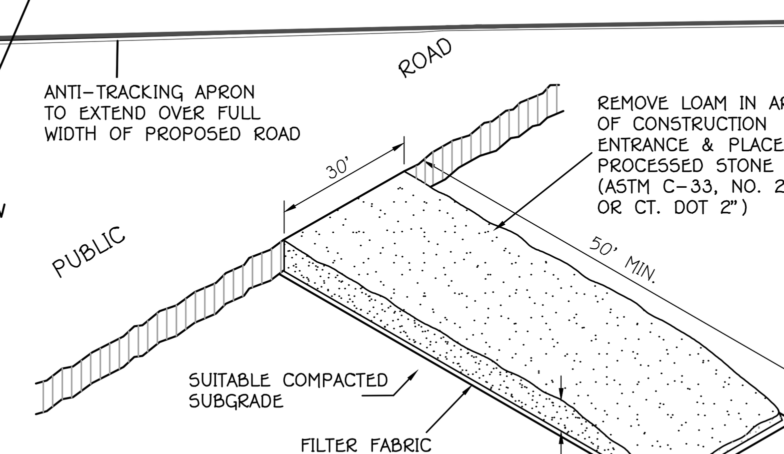

REMOVE LOAM IN AREA OF CONSTRUCTION ENTRANCE & PLACE PROCESSED STONE (ASTM C-33, NO. 2 OR 3, OR CT. DOT 2")

ANTI-TRACKING APRON

(NOT TO SCALE)

NOTE:
THIS PROJECT LIES WITHIN THE WATERSHED OF THE PUBLIC WATER SUPPLY OF THE CITY OF NEW LONDON DEPARTMENT OF PUBLIC UTILITIES.

NOTES:
1. REFERENCE IS MADE TO THE FOLLOWING MAPS:
   A. PROPERTY SURVEY MAP, PROPERTY OF, JOETTE J. GAREY, 1499 HARTFORD NEW LONDON TURNPIKE, OAKDALE/MONTVILLE, CONNECTICUT, DATE: FEBRUARY 21, 2018, BY ANGUS McDONALD/GARY SHARPE & ASSOCIATES, INC.
   B. SITE DEVELOPMENT PLAN, PROPERTIES OF, JOETTE J. GAREY, 1499 & 1505 HARTFORD NEW LONDON TURNPIKE, OAKDALE/MONTVILLE, CONNECTICUT, DATE: OCTOBER 31, 2018, BY ANGUS MCDONALD/GARY SHARPE & ASSOCIATES, INC.
   C. PROPERTY SURVEY AND SUBDIVISION PLAN, PROPERTY OF, W. LAWRENCE MINER, JR., REVOCABLE TRUST, HARTFORD ROAD (CONNECTICUT ROUTE 85) AND CHESTERFIELD ROAD, MONTVILLE, CONNECTICUT, DATE: JANUARY 20, 2000, REVISED THRU: 5/19100 BY: DiCESARE-BENTLEY ENGINEERS, INC.
   D. PLAN SHOWING PROPERTY OF, ELIZABETH SADINSKY, ROUTE 85 AND OAKDALE-CHESTERFIELD ROAD, TOWN OF MONTVILLE, CONN., DATE: OCTOBER 1970, BY: DiCESARE-BENTLEY-WELLING ENGR'S.
   E. TOWN ROADS, MONTVILLE, BY: CONNECTICUT DEPARTMENT OF TRANSPORTATION, REIVED TO DEC. 31, 1974, CGS DATA REVISED DEC. 15, 1999
   F. CONNECTICUT STATE HIGHWAY DEPARTMENT, RIGHT OF WAY MAP, TOWN OF MONTVILLE, HARTFORD-NEW LONDON ROAD, FROM THE KRUPCAL PROPERTY, SOUTHERLY ABOUT 5,550 FEET, ROUTE No. 102, SHEETS 1 & 2 OF 2, DATE: SEPT. 30-1930, REVISED: OCTOBER 16, 1967.
   G. TOWN OF MONTVILLE, ROUTE #85,PLAN SHOWING TAKING LINE AT, SADINSKY PROP. & ADJOINING PROP. OWNERS, BEGINNING AT ROUTE #161, FLANDERS ROAD, RUNNING SOUTHEASTERLY 2,300 FEET. DATE: JULY 1963.
   H. TOWN OF MONTVILLE, MAP SHOWING LAND AND EASEMENT ACQUIRED BY, THE STATE OF CONNECTICUT, FROM ELIZABETH K. SADINSKY, NEW LONDON TURNPIKE, DATE: DECEMBER 1948, SHEETS 1 & 2 OF 2.
2. FOR SUBJECT PROPERTY, REFERENCE IS MADE TO THE FOLLOWING DEEDS ON FILE IN THE TOWN OF MONTVILLE LAND RECORDS AS VOL. 581 PG. 49 & VOL. 638 PG. 521 AND LISTED ON ASSESSOR'S MAP 005 AS LOTS 24-00A & 23-00A
3. SUBJECT PROPERTY IS NOT IN A FLOOD HAZARD ZONE PER FEMA FLOOD INSURANCE RATE MAP, NEW LONDON COUNTY, CONNECTICUT, MAP NUMBER 09011C0337G, EFFECTIVE DATE: JULY 18, 2011
4. INLAND WETLANDS MARKED BY RICHARD SNARSKI, SOIL SCIENTIST, 2/15/2018 & 9/27/18 AND LOCATED BY FIELD SURVEY.

20 15 10 5 0 20 40 60
SCALE IN FEET

SEDIMENTATION AND EROSION CONTROL PLAN

STUART J. FAIRBANK
CONN. P.E. #20206

BOUNDARY LINES OF ADJOINING PROPERTIES ARE SHOWN FOR GENERAL INFORMATIONAL PURPOSES ONLY AND ARE NOT TO BE CONSTRUED AS BEING ACCURATELY LOCATED OR DEPICTED.

©2019 – ANGUS McDONALD / GARY SHARPE & ASSOCIATES, INC.

THESE DRAWINGS ARE THE PROPERTY OF ANGUS MCDONALD/GARY SHARPE & ASSOCIATES, INC. AND HAVE BEEN SPECIFICALLY PREPARED FOR THE OWNER OF THIS PROJECT OR PROPERTY, THEY ARE NOT TO BE DUPLICATED OR USED IN PART OR WHOLE FOR ANY OTHER PURPOSE, PROJECT, LOCATION OR OWNER WITHOUT THE EXPRESS WRITTEN CONSENT OF ANGUS MCDONALD/GARY SHARPE & ASSOCIATES, INC.

THE WORD "CERTIFY", AS USED IS UNDERSTOOD TO BE AN EXPRESSION OF PROFESSIONAL OPINION BY THE ENGINEER OR SURVEYOR. IT IS A DECLARATORY STATEMENT WHICH IS BASED ON HIS BEST KNOWLEDGE, INFORMATION AND BELIEF. AS SUCH IT CONSTITUTES NEITHER GUARANTEE NOR WARRANTY, EXPRESSED OR IMPLIED, OF ANY INFORMATION CONTAINED HEREON. NO CERTIFICATION IS EXPRESSED OR IMPLIED ON ANY ORIGINAL OR ANY DUPLICATE OF THIS PLAN UNLESS IT BEARS AN ORIGINAL STAMP OR SEAL AND ORIGINAL SIGNATURE OF THE INDIVIDUAL WHOSE REGISTRATION NUMBER APPEARS HEREON.

LAND & MARINE — ENGINEERING — SURVEYING — PLANNING

ANGUS McDONALD
GARY SHARPE
& ASSOCIATES, INC.
SINCE 1966
P.O. BOX 608, 233 BOSTON POST ROAD
OLD SAYBROOK, CONNECTICUT 06475
TEL. (860) 388-4671 FAX (860) 388-3962

SITE DEVELOPMENT PLAN
PREPARED FOR
DEER RUN STABLE, LLC
1499 & 1505 HARTFORD NEW LONDON TURNPIKE
OAKDALE/MONTVILLE, CONNECTICUT

DATE: JULY 10, 2019	SCALE: 1"=20'
DR'N DO'D	CK'D / APP'D
SHEET 5 of 11	JOB NO. 186333
REVISIONS: 2-20-20 UPDATED, 2-27-20 PER TOWN PLANNER, 3-11-20	

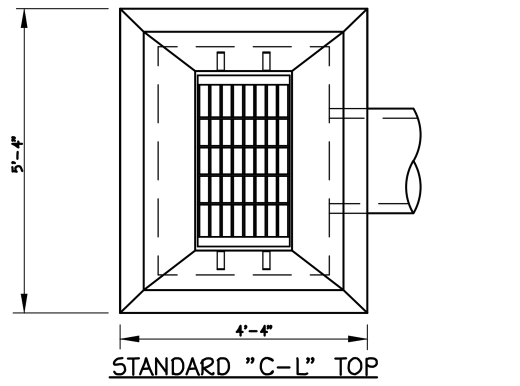

STANDARD "C-L" TOP
PLAN VIEW

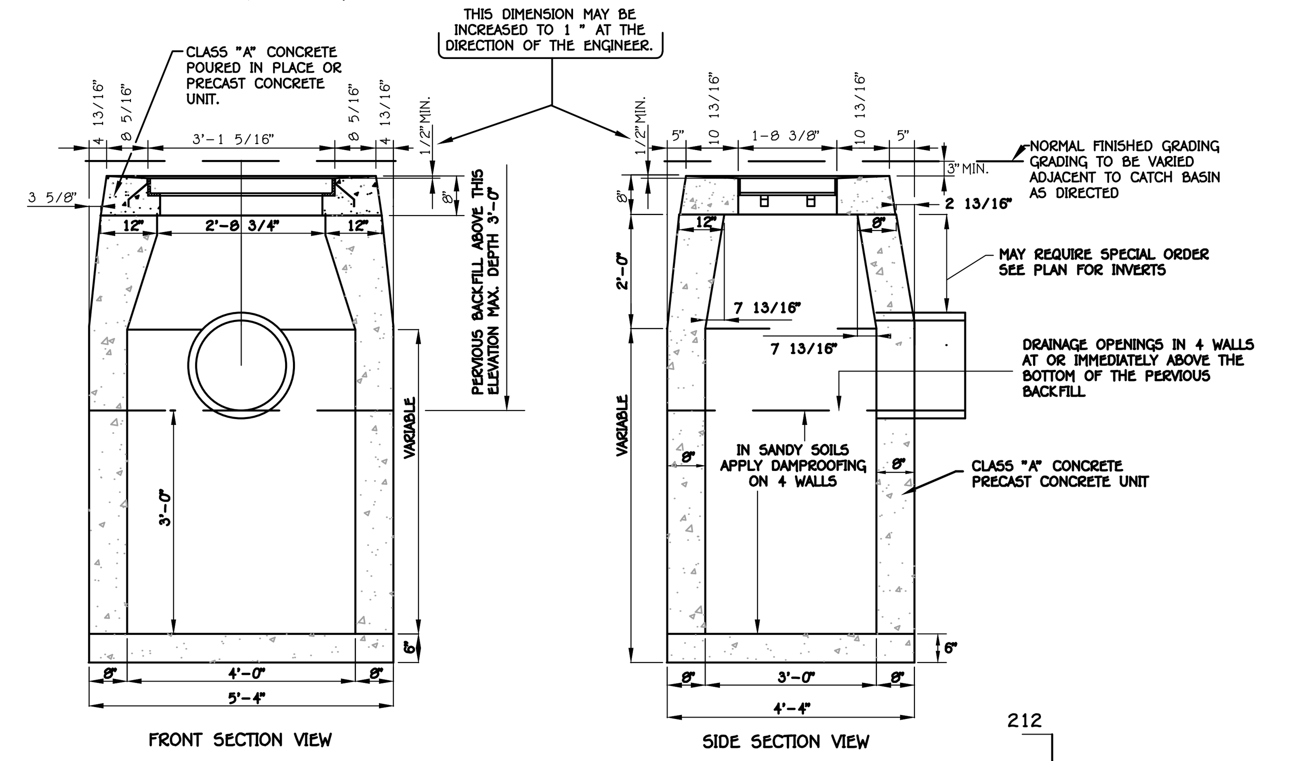

TYPE "C-L" CATCH BASIN

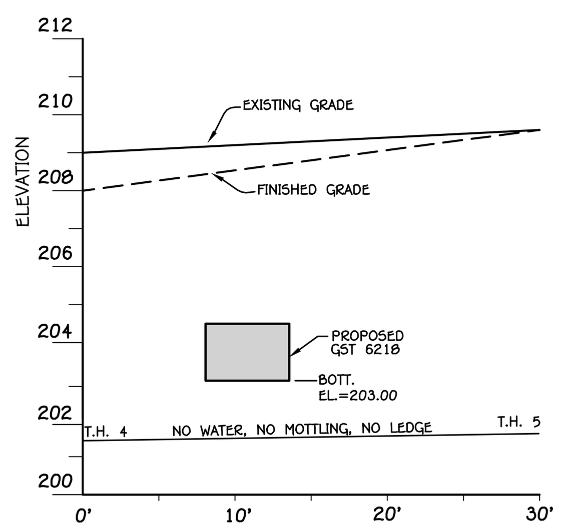

LEACHING FIELD X-SECTION A-A
SCALE: 1"=10' HORIZ.
1"=4' VERT.

SEPTIC SYSTEM DESIGN CRITERIA
PROPOSED 4,960 SF CONVENIENCE STORE
3,700 SF CONVENIENCE STORE
1,260 SF DRIVE THROUGH FRANCHISE
WITH 6 INDOOR SEATS-NO FOOD PREP ON SITE
3,700 SF X .1 GAL/SF/DAY = 370 GAL/DAY
DESIGN DISCHARGE FROM FRANCHISE = 1,068 GAL/DAY**
SITE DESIGN DISCHARGE = 1,438 GAL/DAY
DESIGN PERCOLATION RATE = 1.1-10.0 MIN/INCH
APPLICATION RATE = 1.5 GAL/SF/DAY FOR CONVENIENCE STORE
REQUIRED EFFECTIVE LEACHING AREA = 370/1.5 = 247 SF ELA REQUIRED
APPLICATION RATE = 0.8 GAL/SF/DAY FOR FRANCHISE
REQUIRED EFFECTIVE LEACHING AREA = 1,068/0.8 = 1,335 SF ELA REQUIRED
TOTAL EFFECTIVE LEACHING AREA REQUIRED = 247 = 1,335 = 1,582 SF
INSTALL 113 LF GEOMATRIX GST6218
113 LF X 14 SF/LF = 1,582 SF EFFECTIVE LEACHING AREA PROVIDED
1,500 GAL. SEPTIC TANK REQUIRED AND PROVIDED

MLSS CALCULATION
RESTRICTIVE LAYER= > 60"
NO MLSS REQUIRED

** DESIGN DISCHARGE TAKEN FROM PAST WATER USAGE AT A DUNKIN DONUTS LOCATED AT 435 OCEAN AVENUE, NEW LONDON FOR THE PERIOD BETWEEN NOVEMBER 16, 2012 & APRIL 16, 2014 AS DOCUMENTED ON PLANS FOR THE BESTWAY CONVENIENCE STORE, ROUTE 82, BOZRAH DATED:MAY 2, 2014 BY DICESARE BENTLEY ENGINEERS

CONSTRUCTION NOTES FOR SEPTIC SYSTEM

1. REMOVE TOPSOIL FROM SYSTEM AREA AND STORE ON-SITE FOR FUTURE USE.
2. ENGINEER TO SET A BENCHMARK AND STAKE SEPTIC SYSTEM PRIOR TO CONSTRUCTION. ENGINEER TO AS-BUILT SEPTIC SYSTEM COMPONENTS PRIOR TO BACKFILL AND PRODUCE AN AS-BUILT MAP. CONTRACTOR TO NOTIFY ENGINEER (3) BUSINESS DAYS IN ADVANCE FOR REQUEST TO PERFORM STAKEOUT OR AS-BUILT SURVEYS.
3. PRIOR TO FILL PLACEMENT, KEEP HEAVY EQUIPMENT TRAFFIC TO A MINIMUM IN SYSTEM AREA TO AVOID COMPACTION OF SUBSOIL. SCARIFY SUBSOIL WHERE COMPACTED OR IF HEAVY RAIN FALLS DURING CONSTRUCTION WHEN SUBSOIL IS EXPOSED.
4. ANY UNSUITABLE MATERIAL ENCOUNTERED BELOW TOPSOIL TO BE REMOVED. AREA TO BE INSPECTED AND APPROVED BY DESIGN ENGINEER AND TOWN SANITARIAN PRIOR TO PLACEMENT OF FILL.
5. PLACE APPROVED FILL TO CONTOURS SHOWN IN 6" LIFTS. FILL IN SYSTEM AREA TO BE APPROVED BY TOWN SANITARIAN AND DESIGN ENGINEER, AND CONFORM TO THE FOLLOWING GRADATION DETERMINED BY WASHED SIEVE ANALYSIS:
   A. THE SELECT FILL SHALL NOT CONTAIN ANY MATERIAL LARGER THAN THE 3" SIEVE.
   B. UP TO 45 % OF THE DRY WEIGHT OF THE REPRESENTATIVE SAMPLE MAY BE RETAINED ON THE #4 SIEVE.
   C. THE MATERIAL THAT PASSES THE #4 SIEVE IS THE REWEIGHED AND THE SIEVE ANALYSIS STARTED.
   D. THE REMAINING MATERIAL SHALL MEET THE FOLLOWING GRADATION CRITERIA:

SIEVE SIZE	PERCENT PASSING WET SIEVE	PERCENT PASSING DRY SIEVE
#4	100	100
#10	70-100	70-100
#40	10-50*	10-75
#100	0-20	0-5
#200	0-5	0-2.5

* PERCENT PASSING THE #40 CAN BE INCREASED TO NO GREATER THAN 75% IF THE PERCENT PASSING THE #100 SIEVE DOES NOT EXCEED 10% AND THE #200 SIEVE DOES NOT EXCEED 5%
6. EXCAVATE AND INSTALL LEACHFIELD OR GALLERY. LEACHFIELD OR GALLERY MUST BE INSPECTED BY TOWN SANITARIAN BEFORE BACKFILLING.
7. AFTER BACKFILLING SYSTEM, GRADE, LOAM AND SEED ALL EXPOSED AREAS IMMEDIATELY. ALL SEEDING MUST BE COMPLETE PRIOR TO SEPTEMBER 15.
8. IMPLEMENT STEPS 5-9 OF SEDIMENTATION & EROSION CONTROL MEASURES.

GRADATION TABLE FOR ASTM C-33 SAND TO BE USED IN GEOMATRIX PRODUCTS

SIEVE SIZE	PERCENT PASSING
3/8"	100
#4	95-100
#8	80-100
#16	50-85
#30	25-60
#50	10-30
#100	2-10
#200	0-3

GRADATION TABLE FOR CRUSHED AGGREGATE FILL TO BE USED AS COVER OVER GEOMATRIX PRODUCTS

SIEVE SIZE	PERCENT PASSING
1 1/2"	100
3/4"	50-100
#4	25-50
#40	10-20
#100	5-15
#200	<10

TEST HOLE DATA
DATE: 12/20/18
PRESENT: FERN TREMBLAY (ALM/GPS)
MICHAEL KIRBY, RS (UNCAS HEALTH DEPT.)

TH 1
0-9" TOPSOIL
9-19" LOAMY SUBSOIL
19-34" FINE GRAY SAND AND SILT
34-98" TAN MEDIUM SAND

NO WATER, NO MOTTLING*, NO LEDGE

*MOTTLING FROM SURFACE WATER 19-32" IN SILT MATERIAL

TH 2
0-9" TOPSOIL
9-51" FINE GRAY SILT IN WEST END OF HOLE
9-92" TAN MEDIUM SAND ON EAST END OF HOLE

NO WATER, NO MOTTLING*, NO LEDGE

TH 3
0-8" TOPSOIL
8-16" ORANGE BROWN SANDY LOAM
16-91" TAN MEDIUM SAND

NO WATER, NO MOTTLING*, NO LEDGE

TH 4
0-7" TOPSOIL
7-13" ORANGE BROWN FINE SANDY LOAM
13-91" TAN MEDIUM SAND

NO WATER, NO MOTTLING*, NO LEDGE

TH 5
0-7" TOPSOIL
7-96" TAN MEDIUM SAND

NO WATER, NO MOTTLING*, NO LEDGE

TH 6
0-7" TOPSOIL
7-21" LIGHT BROWN LOAMY SAND WITH GRAVEL
21-42" FINE TAN SAND WITH GRAVEL AND COBBLES
42-91" TAN MEDIUM SAND

NO WATER, NO MOTTLING*, NO LEDGE

TH 11
0-6" TOPSOIL
6-12" ORANGE BROWN FINE SANDY LOAM
12-48" GRAYISH TAN MEDIUM SAND
48-80" BLACK MUCK

WATER @ 45", MOTTLING @ 28", NO LEDGE

TEST HOLE DATA
DATE: 1/2/2020
PRESENT: FERN TREMBLAY (ALM/GPS)

TH 1-2020
0-10" TOPSOIL
10-20" GRAY BROWN FINE LOAMY SAND
20-50" GRAY BROWN MEDIUM-COARSE LOAMY SAND

WATER @ 42", MOTTLING @ 36, NO LEDGE

TH 2-2020
0-5" TOPSOIL
5-42" TAN MEDIUM-COARSE SAND (FILL) W/BOULDERS
42-61" GRAY FINE-MEDIUM SANDY LOAM (FIRM IN PLACE) MOTTLED
61-70" BLACK MUCK

SEEPS @ 42", MOTTLING @ 40", NO LEDGE

TH 3-2020
0-11" TOPSOIL
11-27" YELLOW BROWN FINE-MEDIUM SAND TRACE SILT
27-72" TAN FINE-MEDIUM SAND LITTLE LOAM W/ROCKS & GRAVEL

NO WATER, NO MOTTLING*, NO LEDGE

PERCOLATION TEST DATA

DATED: AUGUST 2019
DEPTH: 27"
BEGIN PRESOAK: 11:15
PRESOAK EMPTY: 11:28
PT 1

TIME:	DROP:
11:28	7"
11:30	12"
11:32	15 1/4"
11:34	16 1/2"
11:36	17 1/2"
11:38	18 3/8"
11:40	DRY @ 19 1/2"

PERCOLATION RATE= 2 MIN/INCH

HDPE RISER DETAILS (IF REQUIRED)	
BYPASS RISER DIAMETER	______"
INLET PIPE INVERT	______"
BYPASS PIPE INVERT	______"
CFT RISER HEIGHT	______"
BYPASS RISER HEIGHT	______"

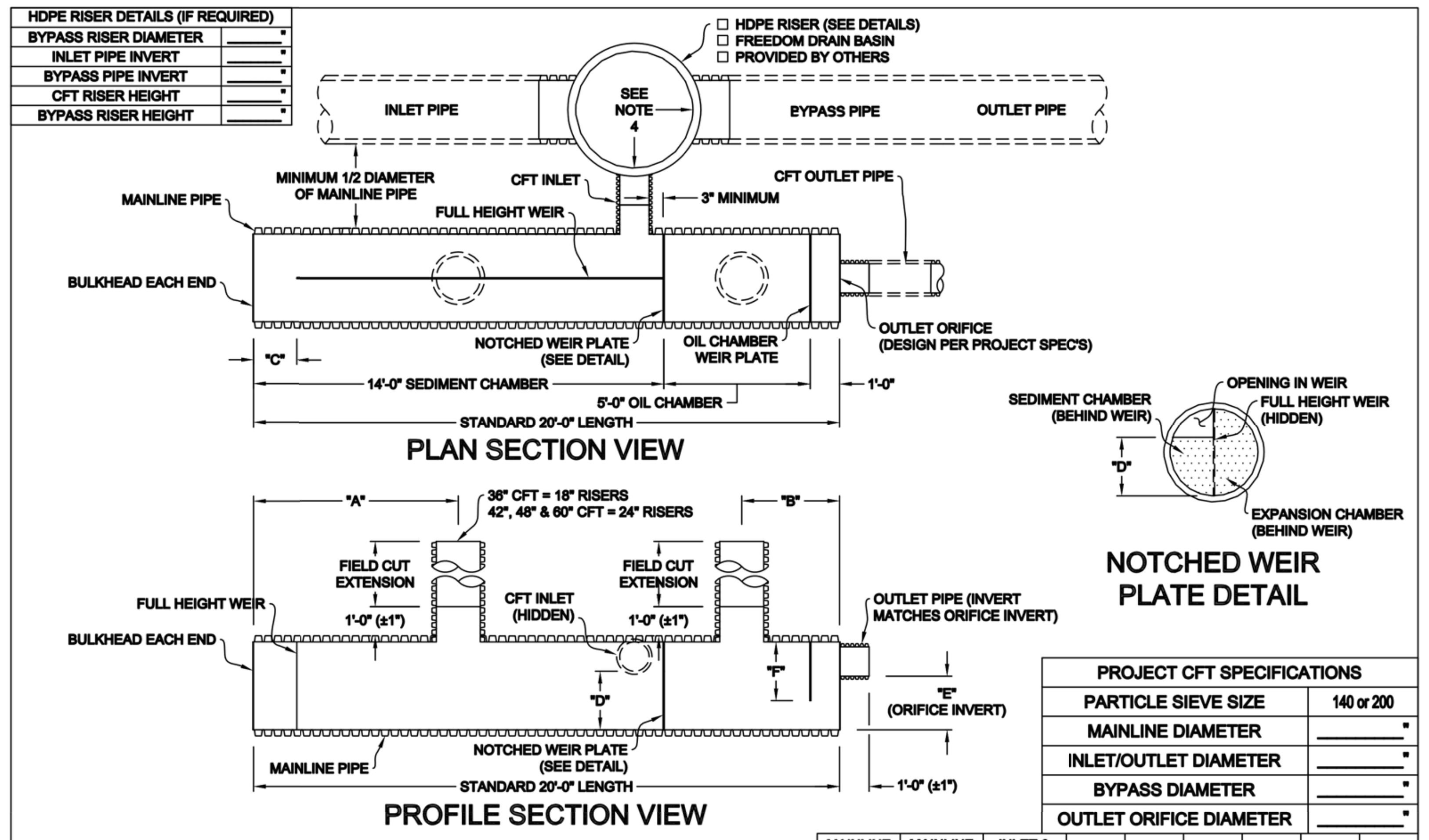

PROJECT CFT SPECIFICATIONS	
PARTICLE SIEVE SIZE	140 or 200
MAINLINE DIAMETER	______"
INLET/OUTLET DIAMETER	______"
BYPASS DIAMETER	______"
OUTLET ORIFICE DIAMETER	______"

GENERAL NOTES:
1.) HDPE Riser (Maximum Height of 8' From Top Of Pipe) Shall Be Backfilled With 1'-0" Minimum Perimeter Manufactured Crushed Aggregate Compacted In 8" Lifts.
2.) For Traffic Loading Conditions, Riser(s) Lid & Frame Loads Shall Not Bear On Riser. Install Concrete Collar Around Riser For Lid And Frame Placement (By Others).
3.) Invert Elevation At Connection Of CFT Outlet To Bypass Pipe Must Be Lower Than CFT Outlet Orifice.
4.) Match Invert of Bypass Pipe And Crown of CFT Inlet Elevations.
5.) CFT Backfill Material Shall Be Manufactured - Aggregates Open Graded, Clean Meeting ASTM D2321 Specifications.
6.) Top Of Full Height Weir Plate Dividing The Expansion/Sediment Chamber Inside Riser Shall, At A Minimum, Match The Invert Of The Bypass Pipe.

MAINLINE DIAMETER	MAINLINE LENGTH	INLET & OUTLET	A	B	C	D	E	F
36"	20'-0"	10"	7'-0"	3'-4"	1'-6"	2'-2"	2'-0"	2'-0"
42"			7'-1¼"	3'-6¾"	1'-9"	2'-8"	2'-6"	2'-6"
48"					2'-0"	3'-2"	3'-0"	3'-0"
36"	20'-0"	12"	7'-0"	3'-4"	1'-6"	2'-0"	1'-10"	2'-0"
42"			7'-1¼"	3'-6¾"	1'-9"	2'-6"	2'-4"	2'-6"
48"					2'-0"	3'-0"	2'-10"	3'-0"
60"	20'-0"	15"	7'-1¼"	3'-2¾"	2'-0"	3'-9"	3'-7"	4'-0"

-Lane's Manufacturing Tolerances per AASHTO M294.
-All Dimensions are nominal. (Unless otherwise noted)

PROJECT NAME:	CUSTOMER:	DRAWN BY: JCH/JDS	DATE: 11/28/12
LOCATION:	DESCRIPTION: STANDARD 20' CFT	DRAWING NUMBER:	PAGE: 1 OF 2

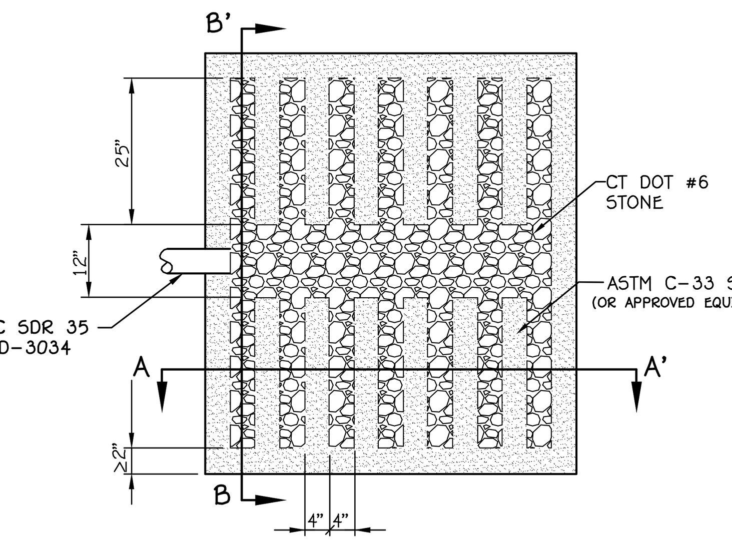

PLAN VIEW

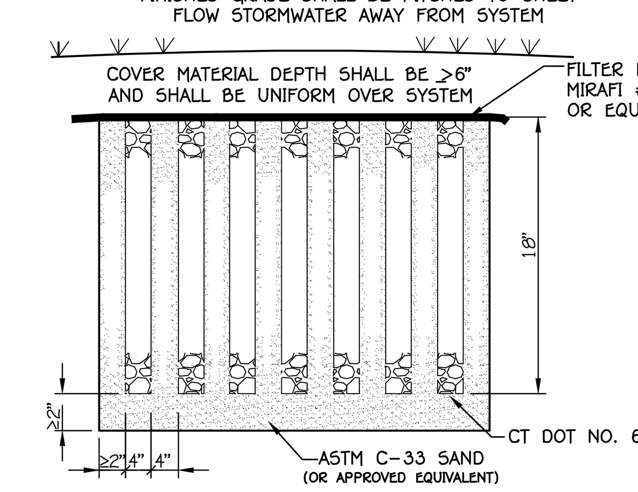

A-A' CROSS SECTION

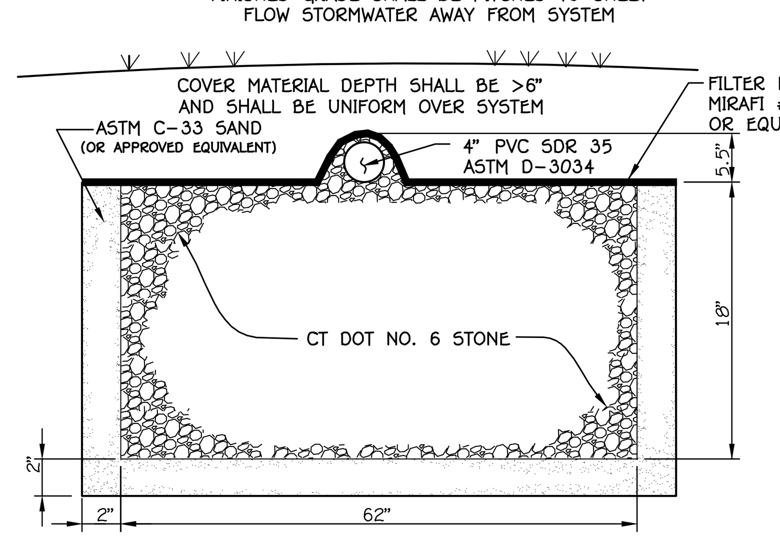

B-B' CROSS SECTION

GEOMATRIX GST6218 LEACHING SYSTEM
NOT TO SCALE

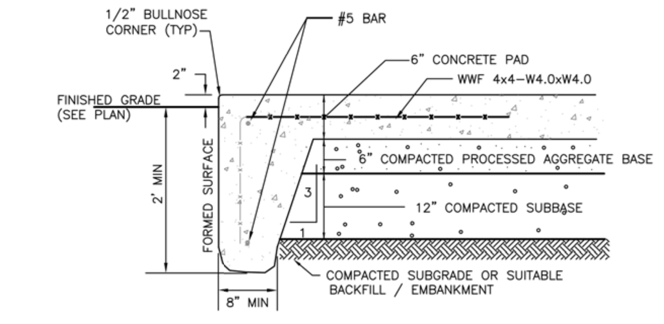

NOTES:
1) ALL COMPACTION TO BE 95% STANDARD PROCTOR DENSITY.
2) CONCRETE TO BE MIN 4500 PSI WITH 6% AIR ENTRAINMENT

CONCRETE PAD
NOT TO SCALE

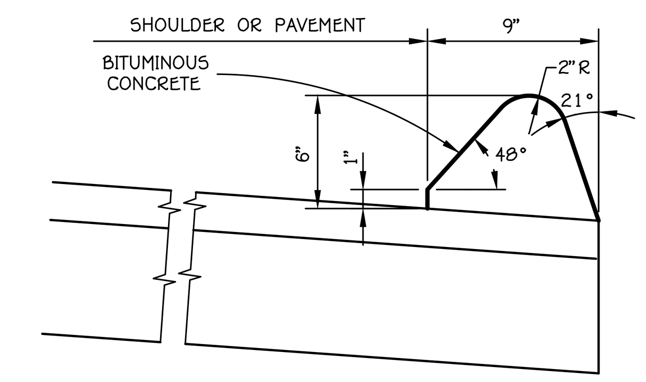

BITUMINOUS CONCRETE LIP CURBING
N.T.S.

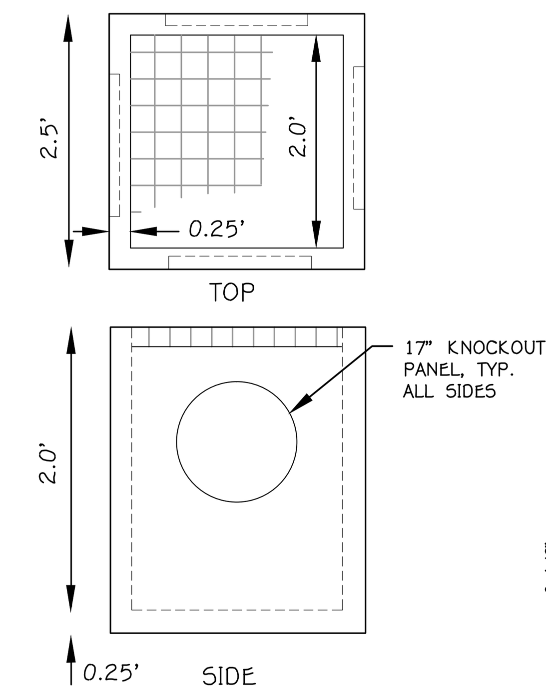

2'x2' CONC. YARD DRAIN
(NOT TO SCALE)

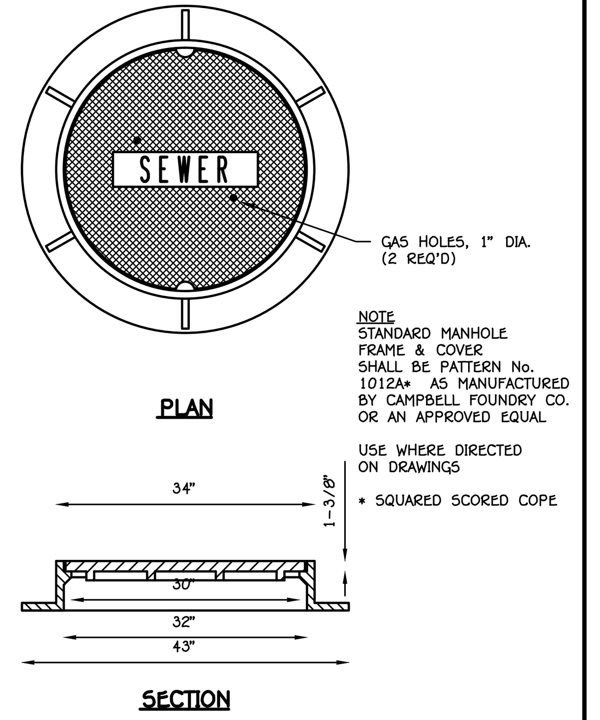

NOTE
STANDARD MANHOLE FRAME & COVER SHALL BE PATTERN No. 1012A* AS MANUFACTURED BY CAMPBELL FOUNDRY CO. OR AN APPROVED EQUAL

USE WHERE DIRECTED ON DRAWINGS

* SQUARED SCORED COPE

STANDARD MANHOLE FRAME AND COVER
SCALE: 3/4" = 1'

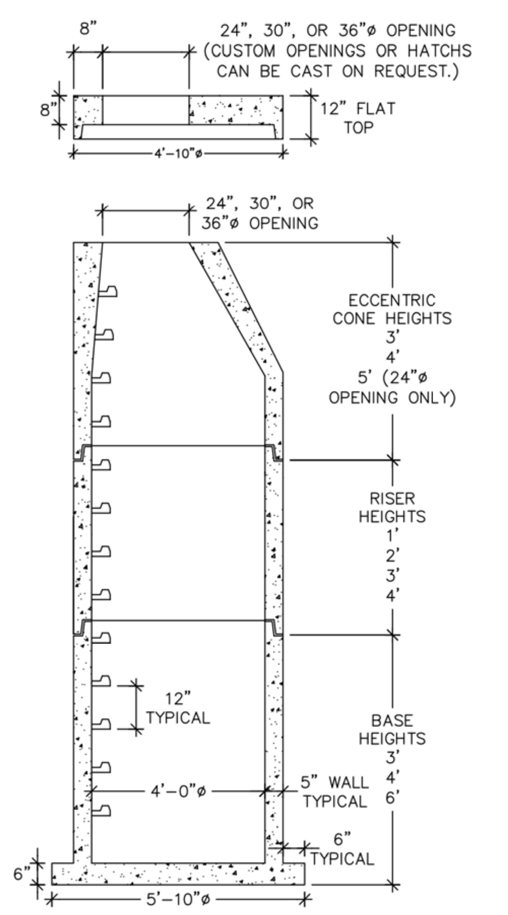

4' DIAMETER MANHOLE COMPONENTS
MANHOLE DESIGN SPECIFICATION CONFORMS TO LATEST:
ASTM DESIGNATION C478

NOTES:
1. JOINT SEALANT IS BUTYL RUBBER MASTIC TYPE SEAL THAT CONFORMS TO LATEST AASHTO SPECIFICATION M-198. MEETS FEDERAL SPECIFICATION SS-S-0021(210-A).
2. REINFORCING STEEL WELDED WIRE FABRIC CONFORMS TO LATEST ASTM SPECIFICATION A185.
3. REINFORCING STEEL DEFORMED BARS CONFORM TO LATEST ASTM SPECIFICATION A615.
4. CONCRETE COMPRESSIVE STRENGTH- 4000 PSI AT 28 DAYS.
5. MANHOLE STEPS MEET LATEST OSHA REGULATION 29 CFR 1910.27, SECTION 16 OF ASTM SPECIFICATION C478 AND SECTION 10 OF ASTM SPECIFICATION C497.
6. WHEN SPECIFIED, MANHOLES ARE COATED WITH BAY OIL, "EBONY".
7. METHOD OF MANUFACTURE: WET CAST.
8. BASE SECTION IS MONOLITHIC.

WEIGHT CHART

PRODUCT	APPROX WEIGHT
3' BASE	4000 LBS.
4' BASE	4700 LBS.
6' BASE	6600 LBS.
1' RISER	900 LBS.
2' RISER	1700 LBS.
3' RISER	2600 LBS.
4' RISER	3400 LBS.
3' CONE W/ 24" OPENING	2500 LBS.
3' CONE W/ 30" OPENING	2600 LBS.
3' CONE W/ 36" OPENING	2750 LBS.
4' CONE W/ 24" OPENING	3200 LBS.
4' CONE W/ 36" OPENING	3600 LBS.
5' CONE W/ 24" OPENING	4200 LBS.
FLAT SLAB TOP W/ 24" OPENING	1650 LBS.
FLAT SLAB TOP W/ 30" OPENING	1500 LBS.
FLAT SLAB TOP W/ 36" OPENING	1250 LBS.

UNITED CONCRETE PRODUCTS INC.
173 CHURCH STREET TEL. 800 234-3119 FAX. (203) 265-4941
YALESVILLE, CT 06492 (203) 269-3119

SPECIFICATIONS:
All Cabinets: fabricated extruded aluminum, 12"Wx.125 wall thickness; fabricated steel sheet and tube sections for structural support; All cabinets to be finish coated white.

Support Column: 12x 12x 3/8" finish coated white, pre-painted and pre-wired prior to shipment.

Mobil/Exxon Cabinet:

Hinge face panel both sides for service access; .150 thick thermo-formed face panels with embossed logo graphics

Lighting:
(6) F96T12 DSNG 50/HO lamps
(1) Magnetek Ballast MSB-1048-816
4.8 Amps, 120 V 60 HZ

Cabinet Weight: Approx. 320 lbs.

Square Footage: 37.07 sq. ft.

Auxiliary Cabinet: Slide face panels for service access; .150 thick, second surface screened flat face panels; LED sign numbers for fuel pricing; 6"-18- changer arm included. Auxiliary cabinet is designed as a 9-line, but can be customized to meet your needs. Auxiliary cabinets shipped separately. Lifting bracket mounted on support column for easy installation.

Lighting: For 9-Line Cabinet-
(22)F84T12 DSGN 50/HO Lamps
(4) Magnetek Ballast MSB-1048-816
22.2 Amps, 120 V 60 HZ.

Cabinet Weight: 1100 lbs

Square Footage: For 9-Line Cabinet-127.71 sq. ft. (14.19 per single line)

Total Weight: Approx. 2970 lbs (including support column)

Total Electrical Service: 27.0 amps
(2) 20 amp circuits

Windload: 35 lbs. per sq. ft;
(Optional: 60 LBS. per sq. ft.)

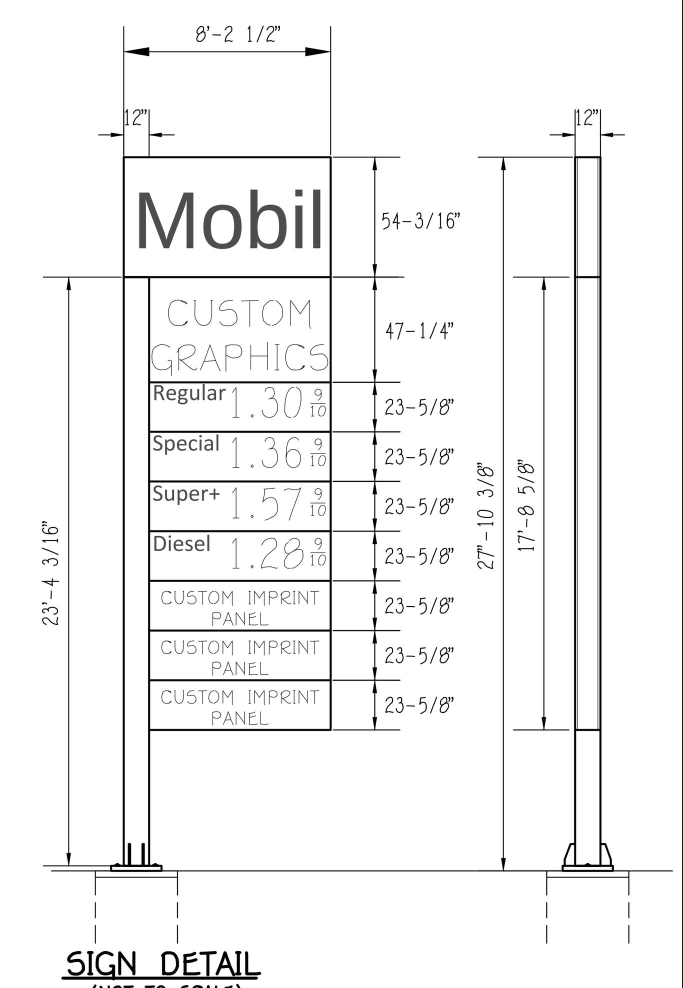

SIGN DETAIL
(NOT TO SCALE)

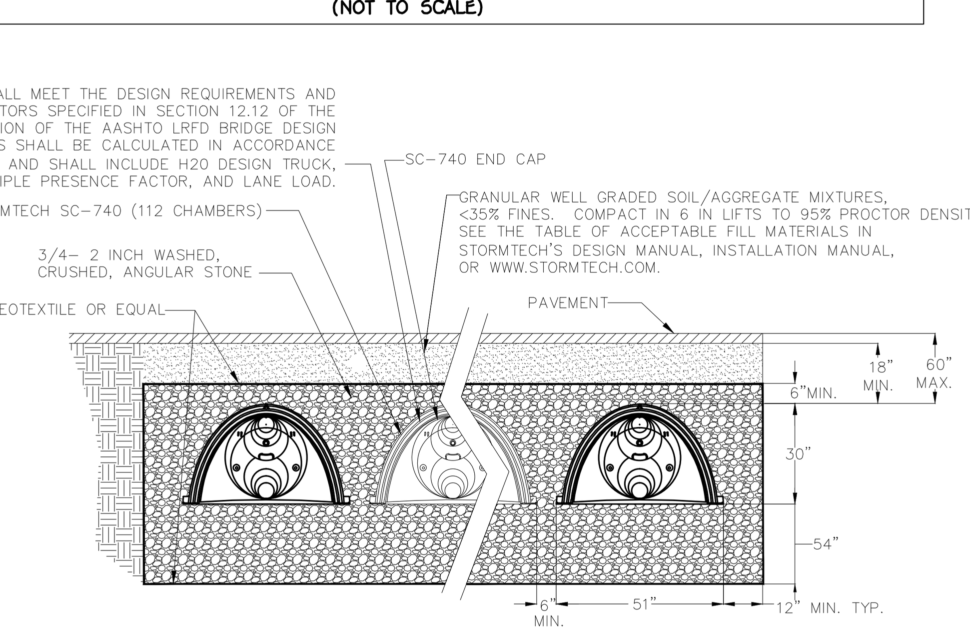

STORM WATER CHAMBER CROSS SECTION
NOT TO SCALE

NOTE

ANY MODIFICATIONS TO THE LOCATION OR ELEVATION OF THE SEPTIC SYSTEM COMPONENTS SHOWN HEREON (INCLUDING CURTAIN DRAINS IF SHOWN) ARE SUBJECT TO THE WRITTEN APPROVAL OF THE DESIGN ENGINEER. THE DESIGN ENGINEER WILL NOT BE RESPONSIBLE FOR ANY CHANGES MADE WITHOUT SUCH WRITTEN APPROVAL.

DETAILS

STUART J. FAIRBANK
CONN. P.E. #20206

BOUNDARY LINES OF ADJOINING PROPERTIES ARE SHOWN FOR GENERAL INFORMATIONAL PURPOSES ONLY AND ARE NOT TO BE CONSTRUED AS BEING ACCURATELY LOCATED OR DEPICTED.

©2016 - ANGUS McDONALD / GARY SHARPE & ASSOCIATES, INC.

THESE DRAWINGS ARE THE PROPERTY OF ANGUS MCDONALD/GARY SHARPE & ASSOCIATES, INC. AND HAVE BEEN SPECIFICALLY PREPARED FOR THE OWNER OF THIS PROJECT OR PROPERTY, THEY ARE NOT TO BE DUPLICATED OR USED IN PART OR WHOLE FOR ANY OTHER PURPOSE, PROJECT, LOCATION OR OWNER WITHOUT THE EXPRESS WRITTEN CONSENT OF ANGUS MCDONALD/GARY SHARPE & ASSOCIATES, INC.

THE WORD "CERTIFY", AS USED IS UNDERSTOOD TO BE AN EXPRESSION OF PROFESSIONAL OPINION BY THE ENGINEER OR SURVEYOR. IT IS A DECLARATORY STATEMENT WHICH IS BASED ON HIS BEST KNOWLEDGE, INFORMATION AND BELIEF. AS SUCH IT CONSTITUTES NEITHER GUARANTEE NOR WARRANTY, EXPRESSED OR IMPLIED, OF ANY INFORMATION CONTAINED HEREON. NO CERTIFICATION IS EXPRESSED OR IMPLIED ON ANY ORIGINAL OR ANY DUPLICATE OF THIS PLAN UNLESS IT BEARS AN ORIGINAL STAMP OR SEAL AND ORIGINAL SIGNATURE OF THE INDIVIDUAL WHOSE REGISTRATION NUMBER APPEARS HEREON.

LAND & MARINE
ENGINEERING
SURVEYING
PLANNING

ANGUS McDONALD
GARY SHARPE
& ASSOCIATES, INC.
SINCE 1966

P.O. BOX 608, 233 BOSTON POST ROAD
OLD SAYBROOK, CONNECTICUT 06475
TEL. (860) 388-4671 FAX (860) 388-3962

SITE DEVELOPMENT PLAN
PREPARED FOR
DEER RUN STABLE, LLC
1499 & 1505 HARTFORD NEW LONDON TURNPIKE
OAKDALE/MONTVILLE, CONNECTICUT

DATE: JULY 10, 2019 SCALE: AS SHOWN
DR'N DO'D | CK'D | APP'D
SHEET 6 of 11 | JOB NO. 186333
REVISIONS: 1/13/20 REVISED PER COMMENTS, 2-20-20 UPDATED ,2-27-20 PER TOWN PLANNER, 3-11-20

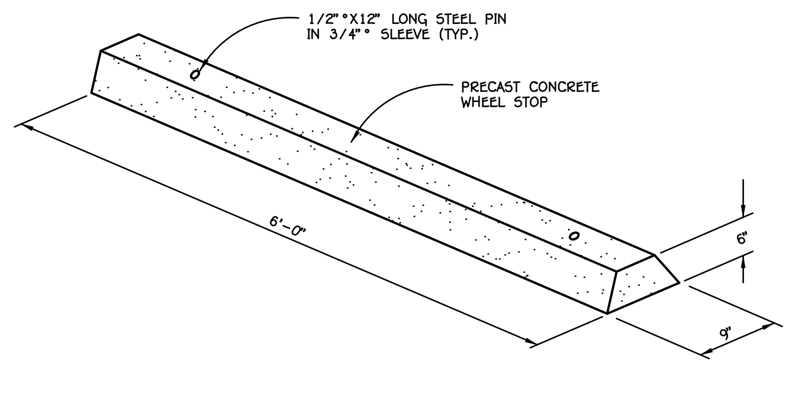

CONCRETE WHEEL STOP
(NOT TO SCALE)

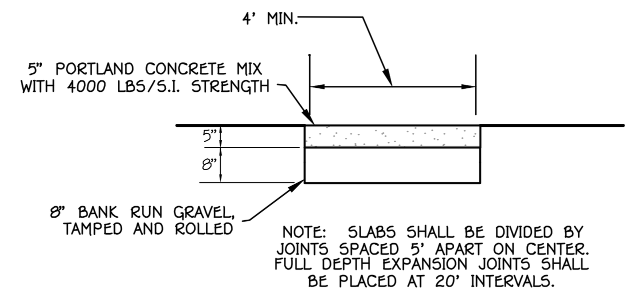

CONCRETE SIDEWALK DETAIL
NOT TO SCALE

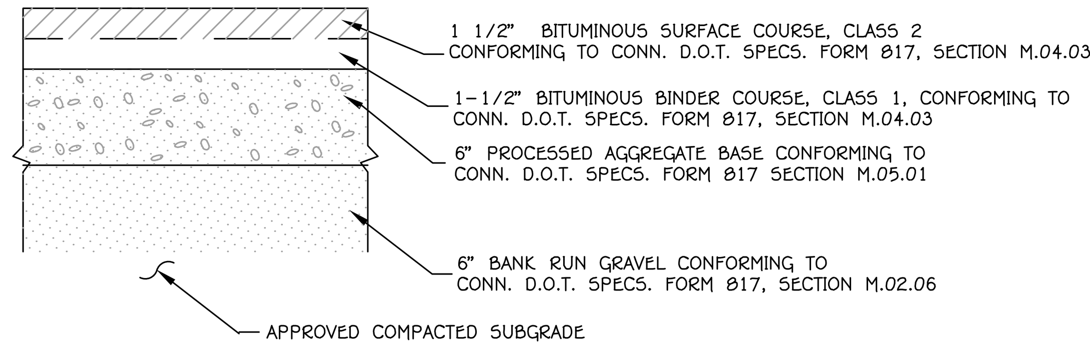

DRIVEWAY / PARKING PAVEMENT SECTION
(NOT TO SCALE)

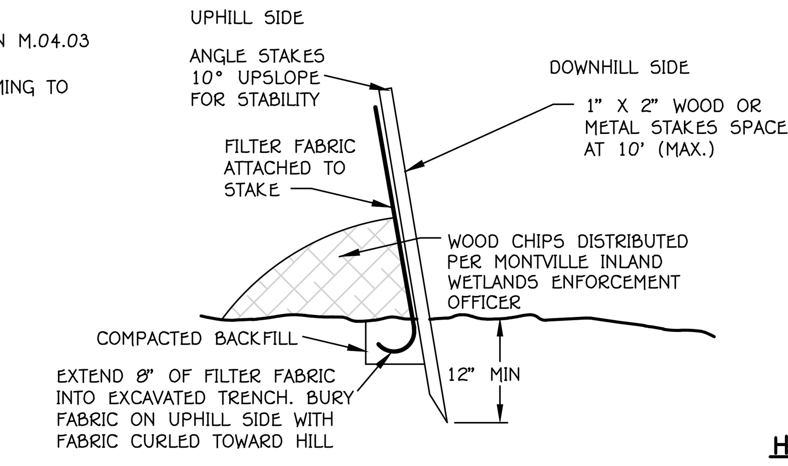

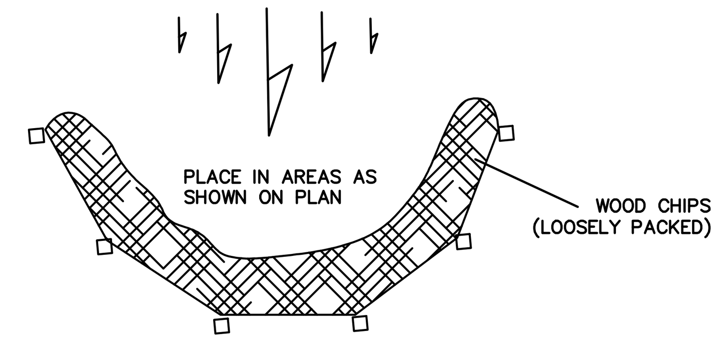

PLAN

SILT FENCE AND WOODCHIP
EROSION CONTROL BARRIER
(NOT TO SCALE)
TO BE INSTALLED IN ALL AREAS DOWNHILL OF GRADING WHERE SILT FENCE AND WOODCHIPS ARE NOT SPECIFIED.

HANDICAPPED PARKING SIGN DETAIL
(NOT TO SCALE)
12"x18"

VAN HANDICAPPED PARKING SIGN DETAIL
(NOT TO SCALE)
12"x18"

ENTRANCE ONLY SIGN DETAIL
12"x18"
(NOT TO SCALE)

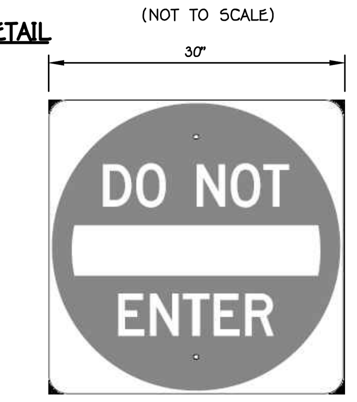

DO NOT ENTER SIGN DETAIL
30"x30"
(NOT TO SCALE)

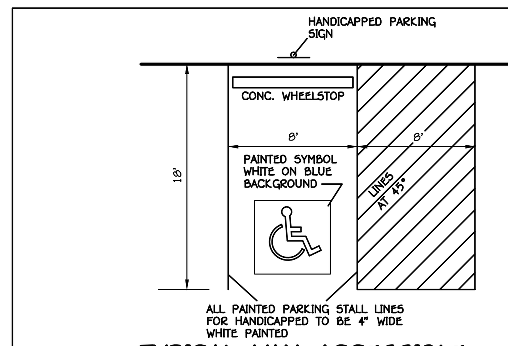

TYPICAL VAN ACCESSIBLE HANDICAPPED PARKING SPACE
(NOT TO SCALE)

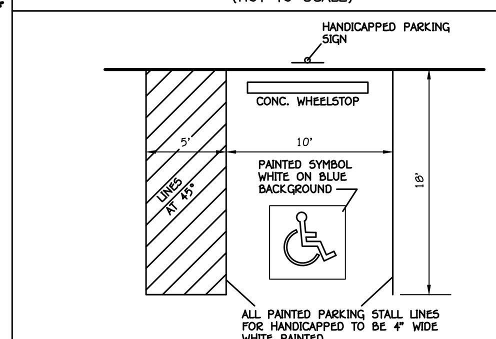

TYPICAL HANDICAPPED PARKING SPACE
(NOT TO SCALE)

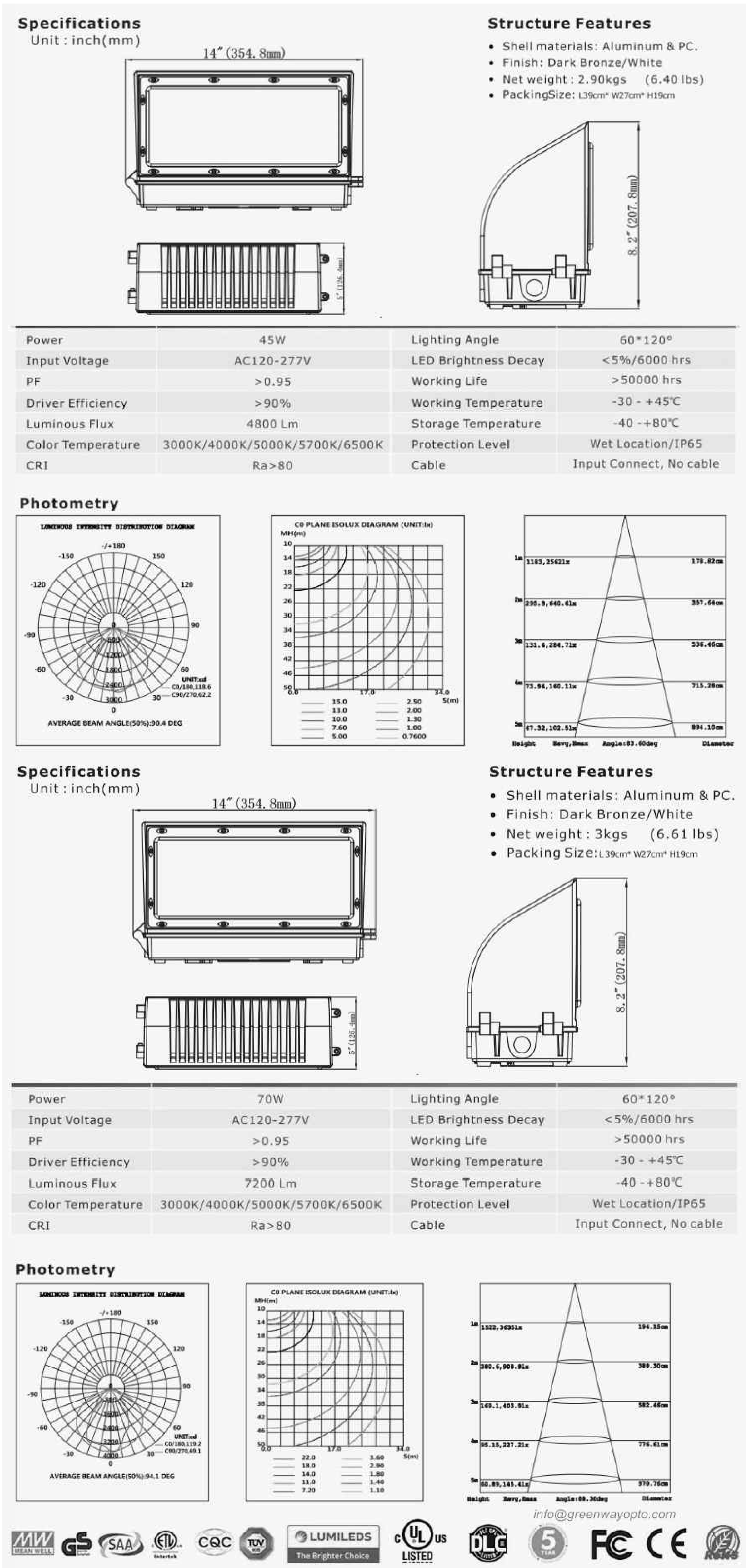

Specifications
Unit : inch(mm)

Structure Features
- Shell materials: Aluminum & PC.
- Finish: Dark Bronze/White
- Net weight : 2.90kgs (6.40 lbs)
- PackingSize: L39cm* W27cm* H19cm

Power	45W	Lighting Angle	60*120°
Input Voltage	AC120-277V	LED Brightness Decay	<5%/6000 hrs
PF	>0.95	Working Life	>50000 hrs
Driver Efficiency	>90%	Working Temperature	-30 - +45℃
Luminous Flux	4800 Lm	Storage Temperature	-40 -+80℃
Color Temperature	3000K/4000K/5000K/5700K/6500K	Protection Level	Wet Location/IP65
CRI	Ra>80	Cable	Input Connect, No cable

Photometry

Specifications
Unit : inch(mm)

Structure Features
- Shell materials: Aluminum & PC.
- Finish: Dark Bronze/White
- Net weight : 3kgs (6.61 lbs)
- Packing Size: L39cm* W27cm* H19cm

Power	70W	Lighting Angle	60*120°
Input Voltage	AC120-277V	LED Brightness Decay	<5%/6000 hrs
PF	>0.95	Working Life	>50000 hrs
Driver Efficiency	>90%	Working Temperature	-30 - +45℃
Luminous Flux	7200 Lm	Storage Temperature	-40 -+80℃
Color Temperature	3000K/4000K/5000K/5700K/6500K	Protection Level	Wet Location/IP65
CRI	Ra>80	Cable	Input Connect, No cable

Photometry

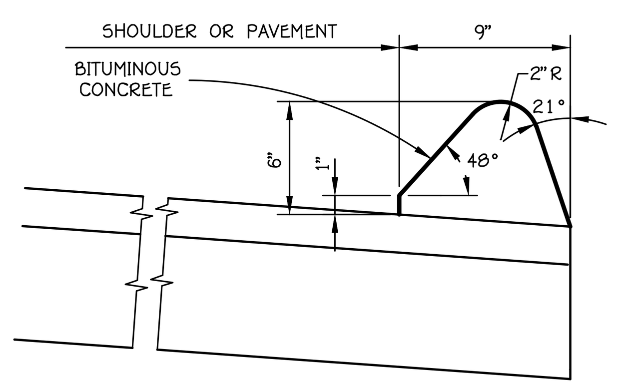

BITUMINOUS CONCRETE LIP CURBING
N.T.S.

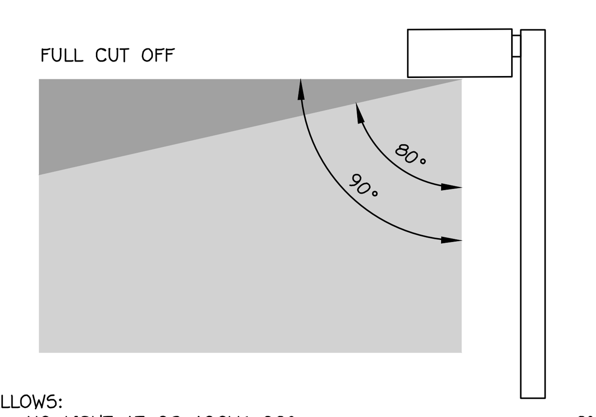

ALLOWS:
NO LIGHT AT OR ABOVE 90°...0%
10cd PER 1000 LAMP LUMENS AT OR ABOVE 80°..........10%

FULL CUT OFF WALL PACK LIGHTING DETAIL
(NOT TO SCALE)

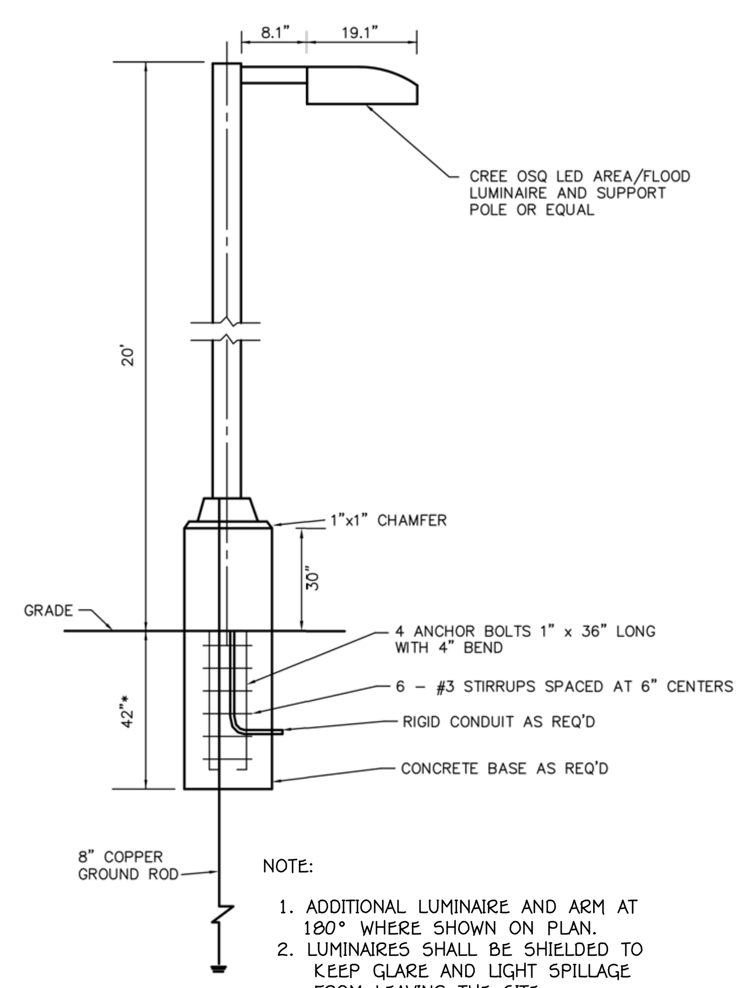

NOTE:
1. ADDITIONAL LUMINAIRE AND ARM AT 180° WHERE SHOWN ON PLAN.
2. LUMINAIRES SHALL BE SHIELDED TO KEEP GLARE AND LIGHT SPILLAGE FROM LEAVING THE SITE.
3. SHOP DRAWING OF FIXTURE TO BE APPROVED BY THE TOWN OF MONTVILLE STAFF.
4. FOUNDATION TO BE REVIEWED BY A STRUCTURAL ENGINEER.

POLE MOUNTED LIGHT
NOT TO SCALE

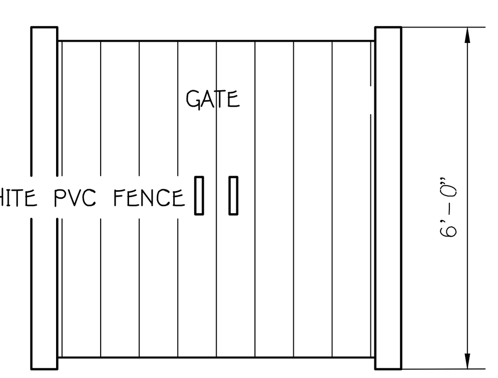

SIDE

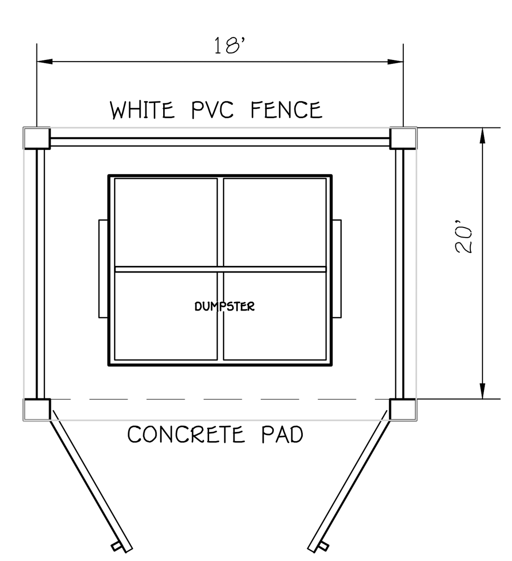

PLAN

DUMPSTER ENCLOSURE DETAIL
(NOT TO SCALE)
SEE SITE DEVELOPMENT PLANS FOR LOCATION.

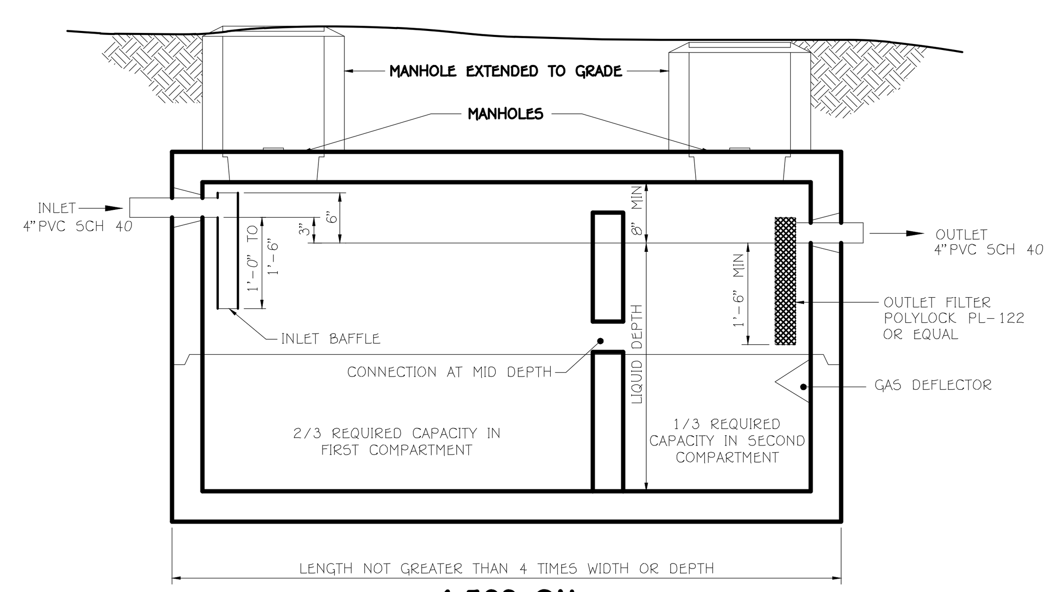

1,500 GAL
TWO COMPARTMENT SEPTIC TANK
NOT TO SCALE

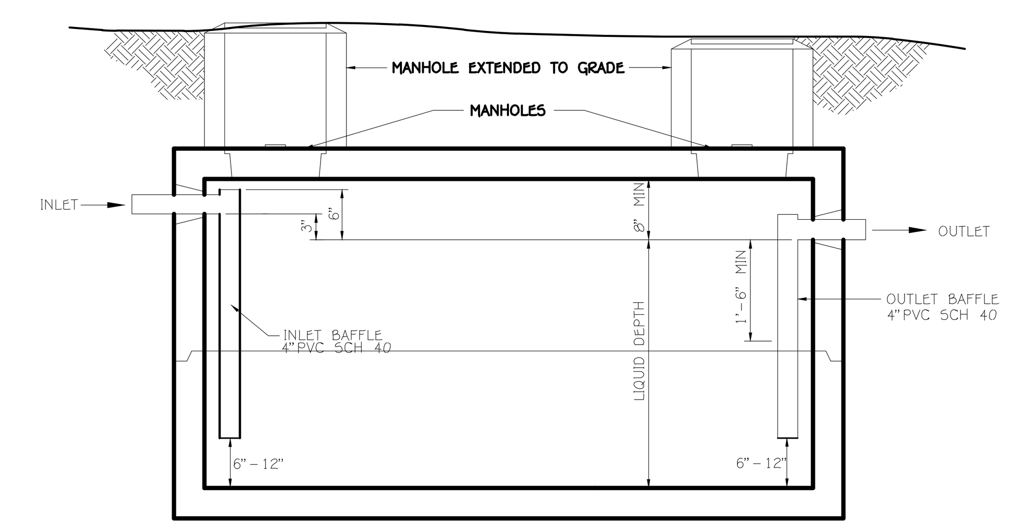

1,500 GAL GREASE INTERCEPTOR TANK
NOT TO SCALE

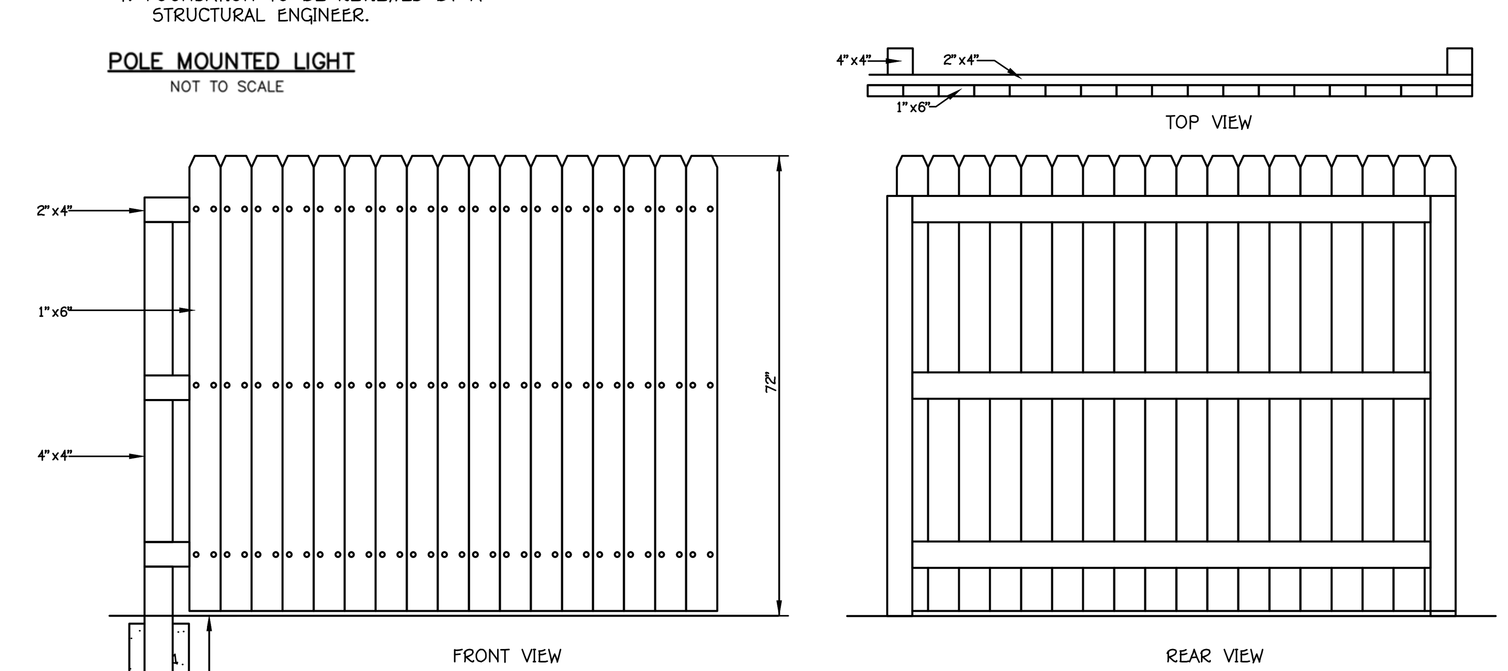

STOCKADE FENCE DETAIL
(NOT TO SCALE)

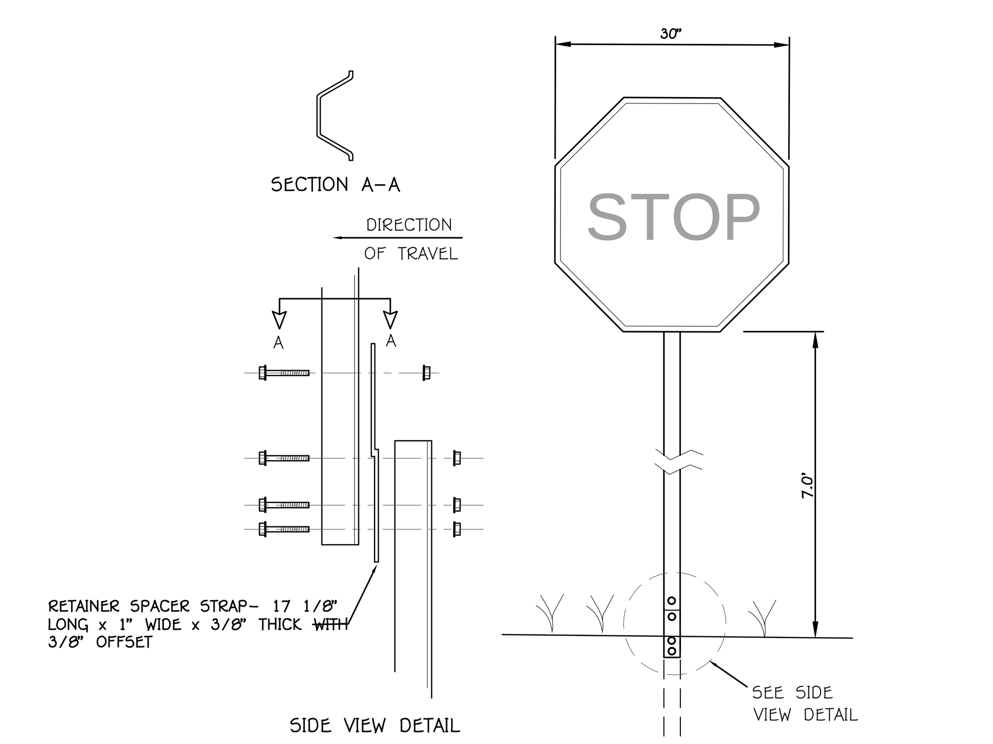

BOLTS- HEX HEAD, INTERGRAL FLANGE CONFORMING TO ASTM A354, SIZE IS 5/16" (8) -18 UNC x 1 3/4" (44) GRADE BC FOR 3 LBS/FT (4.5kg/m) POSTS & 5/16" (8) -18 UNC x 2" (50) GRADE BD FOR 4 LBS/FT (6.0 kg/m) POSTS. NUTS -5/16" (8) UNC HEX HEAD, INTEGRAL FLANGE CONFORMING TO ASTM A563, GRADE DH. LOCKWASHERS -3/8" (10) HEAVY DUTY EXTERNAL TYPE.

TYPICAL BREAK AWAY SIGN DETAIL
(NOT TO SCALE)

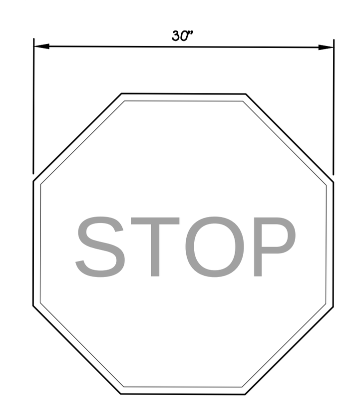

STOP SIGN DETAIL
30"x30"
(NOT TO SCALE)

10 7.5 5 2.5 0 10 20 30
SCALE IN FEET

DETAILS

STUART J. FAIRBANK
CONN. P.E. #20206

BOUNDARY LINES OF ADJOINING PROPERTIES ARE SHOWN FOR GENERAL INFORMATIONAL PURPOSES ONLY AND ARE NOT TO BE CONSTRUED AS BEING ACCURATELY LOCATED OR DEPICTED.

©2016 – ANGUS McDONALD / GARY SHARPE & ASSOCIATES, INC.

THESE DRAWINGS ARE THE PROPERTY OF ANGUS MCDONALD/GARY SHARPE & ASSOCIATES, INC. AND HAVE BEEN SPECIFICALLY PREPARED FOR THE OWNER OF THIS PROJECT OR PROPERTY, THEY ARE NOT TO BE DUPLICATED OR USED IN PART OR WHOLE FOR ANY OTHER PURPOSE, PROJECT, LOCATION OR OWNER WITHOUT THE EXPRESS WRITTEN CONSENT OF ANGUS MCDONALD/GARY SHARPE & ASSOCIATES, INC.

THE WORD "CERTIFY", AS USED IS UNDERSTOOD TO BE AN EXPRESSION OF PROFESSIONAL OPINION BY THE ENGINEER OR SURVEYOR. IT IS A DECLARATORY STATEMENT WHICH IS BASED ON HIS BEST KNOWLEDGE, INFORMATION AND BELIEF. AS SUCH IT CONSTITUTES NEITHER GUARANTEE NOR WARRANTY, EXPRESSED OR IMPLIED, OF ANY INFORMATION CONTAINED HEREON. NO CERTIFICATION IS EXPRESSED OR IMPLIED ON ANY ORIGINAL OR ANY DUPLICATE OF THIS PLAN UNLESS IT BEARS AN ORIGINAL STAMP OR SEAL AND ORIGINAL SIGNATURE OF THE INDIVIDUAL WHOSE REGISTRATION NUMBER APPEARS HEREON.

LAND & MARINE · ENGINEERING · SURVEYING · PLANNING
ANGUS McDONALD
GARY SHARPE
& ASSOCIATES, INC.
SINCE 1966
P.O. BOX 608, 233 BOSTON POST ROAD
OLD SAYBROOK, CONNECTICUT 06475
TEL. (860) 388-4671 FAX (860) 388-3962

SITE DEVELOPMENT PLAN
PREPARED FOR
DEER RUN STABLE, LLC
1499 & 1505 HARTFORD NEW LONDON TURNPIKE
OAKDALE/MONTVILLE, CONNECTICUT

DATE: JULY 10, 2019		SCALE: 1"=10'
DR'N DO'D	CK'D	APP'D
SHEET 7 of 11		JOB NO. 186333

REVISIONS: 1/13/20 REVISED PER COMMENTS, 2-20-20 UPDATED, 2-27-20 PER TOWN PLANNER, 3-11-20

F:\Jobs2018\6333-Choudrey-Montville\Dwg\Site Development Plan-3-25-2020 new layout.dwg, 7 of 11-Details 1, 3/25/2020 8:37:01 AM

VORTECHS 1000 DESIGN NOTES

VORTECHS 1000 RATED TREATMENT CAPACITY IS 1.6 CFS, OR PER LOCAL REGULATIONS. IF THE SITE CONDITIONS EXCEED RATED TREATMENT CAPACITY, AN UPSTREAM BYPASS STRUCTURE IS REQUIRED.

THE STANDARD INLET/OUTLET CONFIGURATION IS SHOWN. FOR OTHER CONFIGURATION OPTIONS, PLEASE CONTACT YOUR CONTECH REPRESENTATIVE. www.ContechES.com

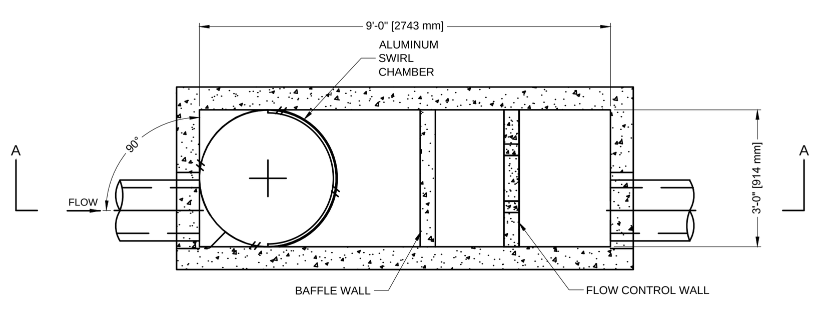

SECTION B-B

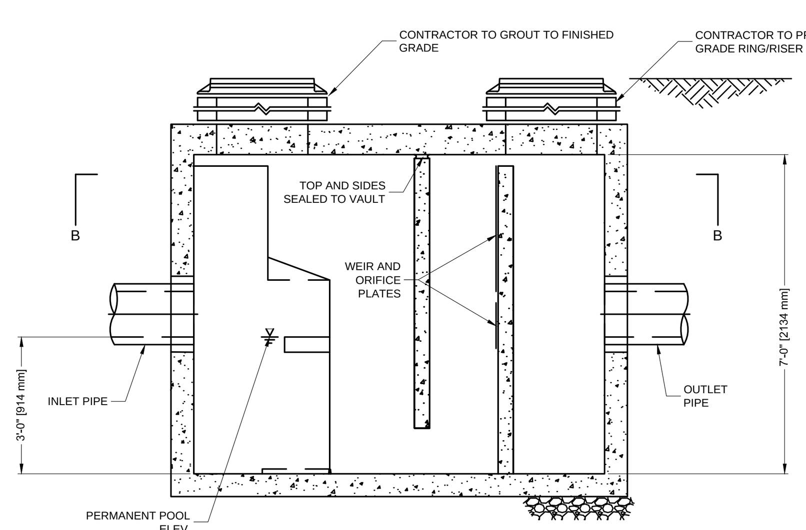

SECTION A-A

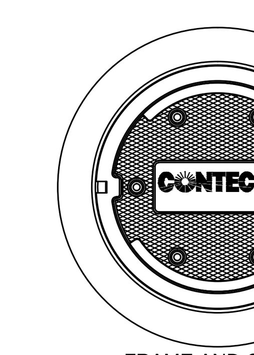

FRAME AND COVER
(DIAMETER VARIES)
N.T.S.

SITE SPECIFIC DATA REQUIREMENTS

STRUCTURE ID	*
WATER QUALITY FLOW RATE (CFS)	*
PEAK FLOW RATE (CFS)	*
RETURN PERIOD OF PEAK FLOW (YRS)	*

PIPE DATA:	I.E.	MATERIAL	DIAMETER
INLET PIPE 1	*	*	*
INLET PIPE 2	*	*	*
OUTLET PIPE	*	*	*

RIM ELEVATION		*
ANTI-FLOTATION BALLAST	WIDTH	HEIGHT
	*	*

NOTES/SPECIAL REQUIREMENTS:

* PER ENGINEER OF RECORD

GENERAL NOTES
1. CONTECH TO PROVIDE ALL MATERIALS UNLESS NOTED OTHERWISE.
2. DIMENSIONS MARKED WITH ( ) ARE REFERENCE DIMENSIONS. ACTUAL DIMENSIONS MAY VARY.
3. FOR FABRICATION DRAWINGS WITH DETAILED STRUCTURE DIMENSIONS AND WEIGHT, PLEASE CONTACT YOUR CONTECH REPRESENTATIVE. www.ContechES.com
4. VORTECHS WATER QUALITY STRUCTURE SHALL BE IN ACCORDANCE WITH ALL DESIGN DATA AND INFORMATION CONTAINED IN THIS DRAWING.
5. STRUCTURE SHALL MEET AASHTO HS20 AND CASTINGS SHALL MEET AASHTO M306 LOAD RATING, ASSUMING GROUNDWATER ELEVATION AT, OR BELOW, THE OUTLET PIPE INVERT ELEVATION. ENGINEER OF RECORD TO CONFIRM ACTUAL GROUNDWATER ELEVATION.
6. INLET PIPE(S) MUST BE PERPEDICULAR TO THE VAULT AND AT THE CORNER TO INTRODUCE THE FLOW TANGENTIALLY TO THE SWIRL CHAMBER. DUAL INLETS NOT TO HAVE OPPOSING TANGENTIAL FLOW DIRECTIONS.
7. OUTLET PIPE(S) MUST BE DOWN STREAM OF THE FLOW CONTROL BAFFLE AND MAY BE LOCATED ON THE SIDE OR END OF THE VAULT. THE FLOW CONTROL WALL MAY BE TURNED TO ACCOMODATE OUTLET PIPE KNOCKOUTS ON THE SIDE OF THE VAULT.

INSTALLATION NOTES
A. ANY SUB-BASE, BACKFILL DEPTH, AND/OR ANTI-FLOTATION PROVISIONS ARE SITE-SPECIFIC DESIGN CONSIDERATIONS AND SHALL BE SPECIFIED BY ENGINEER OF RECORD.
B. CONTRACTOR TO PROVIDE EQUIPMENT WITH SUFFICIENT LIFTING AND REACH CAPACITY TO LIFT AND SET THE VORTECHS STRUCTURE (LIFTING CLUTCHES PROVIDED).
C. CONTRACTOR TO INSTALL JOINT SEALANT BETWEEN ALL STRUCTURE SECTIONS AND ASSEMBLE STRUCTURE.
D. CONTRACTOR TO PROVIDE, INSTALL, AND GROUT PIPES. MATCH PIPE INVERTS WITH ELEVATIONS SHOWN.
E. CONTRACTOR TO TAKE APPROPRIATE MEASURES TO ASSURE UNIT IS WATER TIGHT, HOLDING WATER TO FLOWLINE INVERT MINIMUM. IT IS SUGGESTED THAT ALL JOINTS BELOW PIPE INVERTS ARE GROUTED.

Vortechs
THIS PRODUCT MAY BE PROTECTED BY THE FOLLOWING U.S. PATENT: 5,759,415; RELATED FOREIGN PATENTS.

CONTECH ENGINEERED SOLUTIONS LLC
www.ContechES.com
9025 Centre Pointe Dr., Suite 400, West Chester, OH 45069
800-338-1122 513-645-7000 513-645-7993 FAX

VORTECHS 1000
STANDARD DETAIL

VORTECHS 4000 DESIGN NOTES

VORTECHS 4000 RATED TREATMENT CAPACITY IS 6 CFS, OR PER LOCAL REGULATIONS. IF THE SITE CONDITIONS EXCEED RATED TREATMENT CAPACITY, AN UPSTREAM BYPASS STRUCTURE IS REQUIRED.

THE STANDARD INLET/OUTLET CONFIGURATION IS SHOWN. FOR OTHER CONFIGURATION OPTIONS, PLEASE CONTACT YOUR CONTECH REPRESENTATIVE. www.ContechES.com

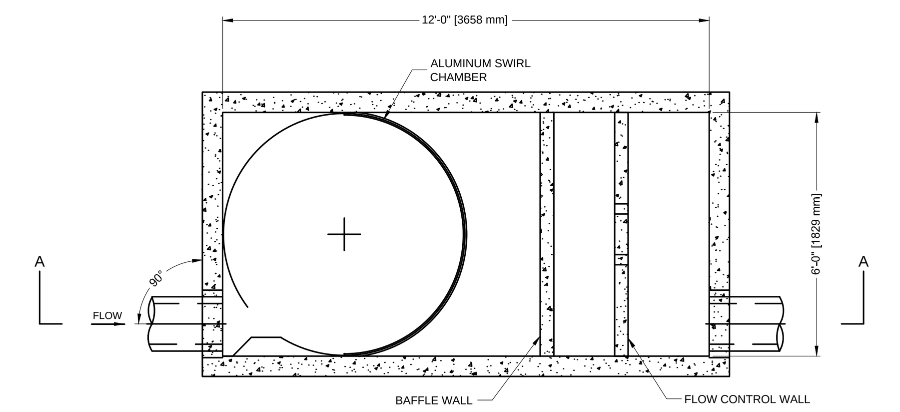

SECTION B-B

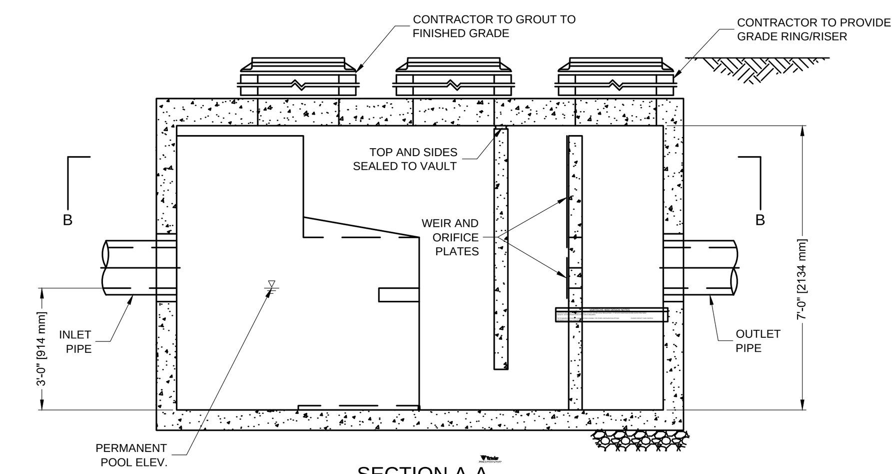

SECTION A-A

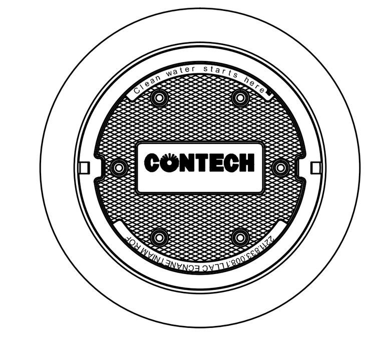

FRAME AND COVER
(DIAMETER VARIES)
N.T.S.

SITE SPECIFIC DATA REQUIREMENTS

STRUCTURE ID	ID
WATER QUALITY FLOW RATE (CFS)	WQFLOW
PEAK FLOW RATE (CFS)	PEAK
RETURN PERIOD OF PEAK FLOW (YRS)	RETURN

PIPE DATA:	I.E.	MATERIAL	DIAMETER
INLET PIPE 1	ELEV	MATERIAL	DIAM
INLET PIPE 2	ELEV	MATERIAL	DIAM
OUTLET PIPE	ELEV	MATERIAL	DIAM

RIM ELEVATION		RIM
ANTI-FLOTATION BALLAST	WIDTH	HEIGHT
	WIDTH	HEIGHT

NOTES/SPECIAL REQUIREMENTS:

* PER ENGINEER OF RECORD

GENERAL NOTES
1. CONTECH TO PROVIDE ALL MATERIALS UNLESS NOTED OTHERWISE.
2. DIMENSIONS MARKED WITH ( ) ARE REFERENCE DIMENSIONS. ACTUAL DIMENSIONS MAY VARY.
3. FOR FABRICATION DRAWINGS WITH DETAILED STRUCTURE DIMENSIONS AND WEIGHT, PLEASE CONTACT YOUR CONTECH REPRESENTATIVE. www.ContechES.com
4. VORTECHS WATER QUALITY STRUCTURE SHALL BE IN ACCORDANCE WITH ALL DESIGN DATA AND INFORMATION CONTAINED IN THIS DRAWING.
5. STRUCTURE SHALL MEET AASHTO HS20 AND CASTINGS SHALL MEET AASHTO M306 LOAD RATING, ASSUMING GROUNDWATER ELEVATION AT, OR BELOW, THE OUTLET PIPE INVERT ELEVATION. ENGINEER OF RECORD TO CONFIRM ACTUAL GROUNDWATER ELEVATION.
6. INLET PIPE(S) MUST BE PERPEDICULAR TO THE VAULT AND AT THE CORNER TO INTRODUCE THE FLOW TANGENTIALLY TO THE SWIRL CHAMBER. DUAL INLETS NOT TO HAVE OPPOSING TANGENTIAL FLOW DIRECTIONS.
7. OUTLET PIPE(S) MUST BE DOWN STREAM OF THE FLOW CONTROL BAFFLE AND MAY BE LOCATED ON THE SIDE OR END OF THE VAULT. THE FLOW CONTROL WALL MAY BE TURNED TO ACCOMODATE OUTLET PIPE KNOCKOUTS ON THE SIDE OF THE VAULT.

INSTALLATION NOTES
A. ANY SUB-BASE, BACKFILL DEPTH, AND/OR ANTI-FLOTATION PROVISIONS ARE SITE-SPECIFIC DESIGN CONSIDERATIONS AND SHALL BE SPECIFIED BY ENGINEER OF RECORD.
B. CONTRACTOR TO PROVIDE EQUIPMENT WITH SUFFICIENT LIFTING AND REACH CAPACITY TO LIFT AND SET THE VORTECHS STRUCTURE (LIFTING CLUTCHES PROVIDED).
C. CONTRACTOR TO INSTALL JOINT SEALANT BETWEEN ALL STRUCTURE SECTIONS AND ASSEMBLE STRUCTURE.
D. CONTRACTOR TO PROVIDE, INSTALL, AND GROUT PIPES. MATCH PIPE INVERTS WITH ELEVATIONS SHOWN.
E. CONTRACTOR TO TAKE APPROPRIATE MEASURES TO ASSURE UNIT IS WATER TIGHT, HOLDING WATER TO FLOWLINE INVERT MINIMUM. IT IS SUGGESTED THAT ALL JOINTS BELOW PIPE INVERTS ARE GROUTED.

CONTECH ENGINEERED SOLUTIONS LLC
9025 Centre Pointe Dr., Suite 400, West Chester, OH 45069
800-338-1122 513-645-7000 513-645-7993 FAX

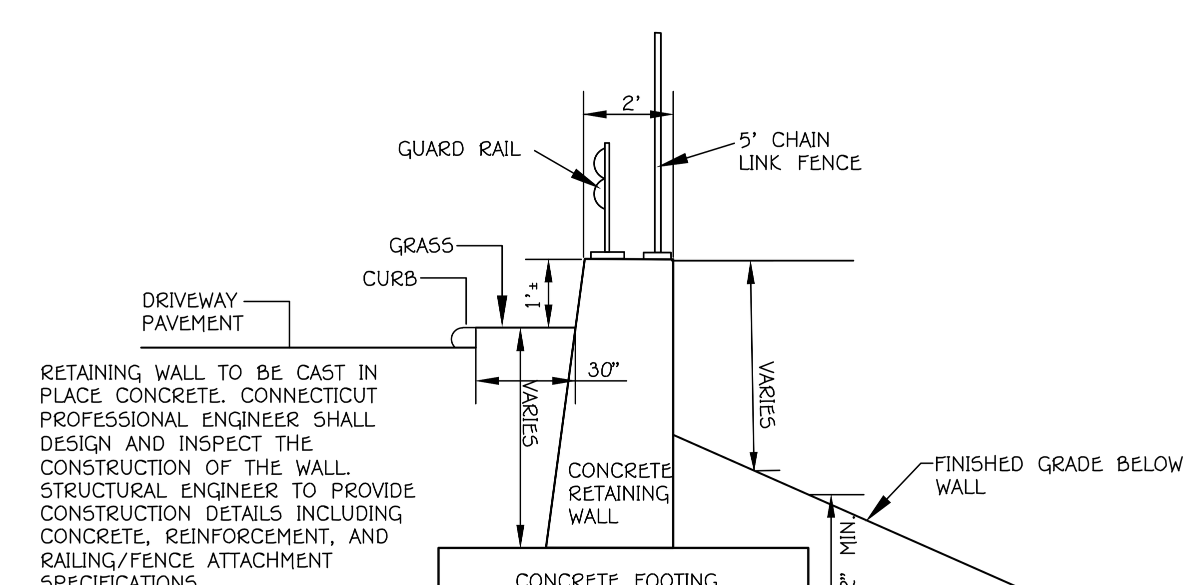

RETAINING WALL TO BE CAST IN PLACE CONCRETE. CONNECTICUT PROFESSIONAL ENGINEER SHALL DESIGN AND INSPECT THE CONSTRUCTION OF THE WALL. STRUCTURAL ENGINEER TO PROVIDE CONSTRUCTION DETAILS INCLUDING CONCRETE, REINFORCEMENT, AND RAILING/FENCE ATTACHMENT SPECIFICATIONS.

RETAINING WALL CROSS SECTION
(NOT TO SCALE)

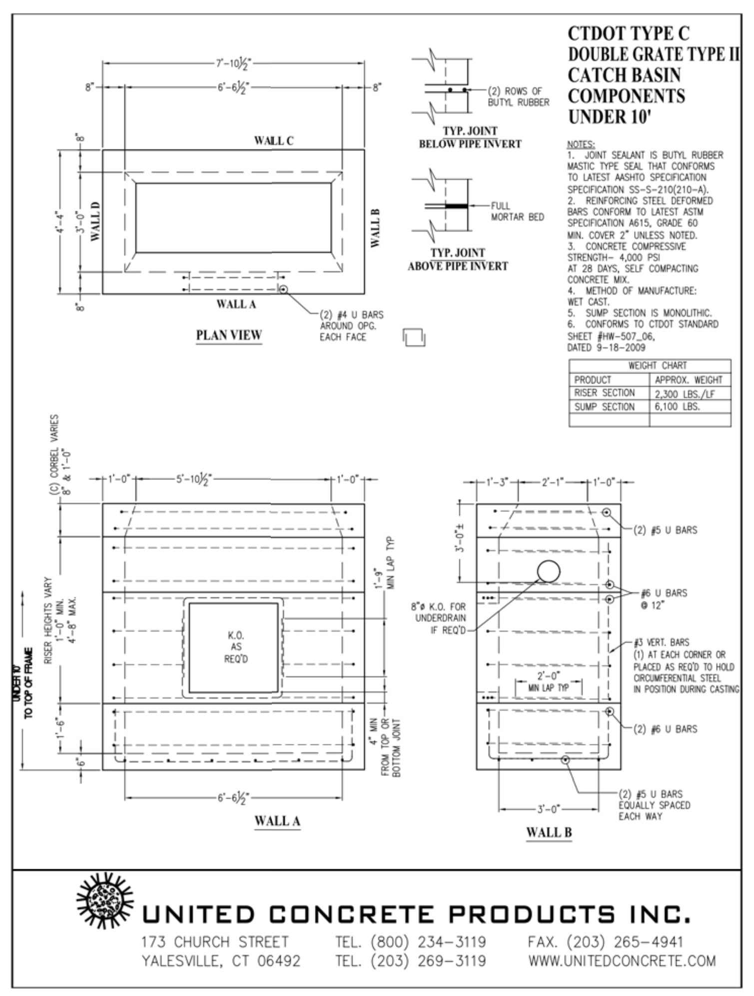

CTDOT TYPE C DOUBLE GRATE TYPE II CATCH BASIN COMPONENTS UNDER 10'

NOTES:
1. JOINT SEALANT IS BUTYL RUBBER MASTIC TYPE SEAL THAT CONFORMS TO LATEST AASHTO SPECIFICATION SPECIFICATION SS-S-210(210-A).
2. REINFORCING STEEL DEFORMED BARS CONFORM TO LATEST ASTM SPECIFICATION A615, GRADE 60 MIN. COVER 2" UNLESS NOTED.
3. CONCRETE COMPRESSIVE STRENGTH- 4,000 PSI AT 28 DAYS, SELF COMPACTING CONCRETE MIX.
4. METHOD OF MANUFACTURE: WET CAST.
5. SUMP SECTION IS MONOLITHIC.
6. CONFORMS TO CTDOT STANDARD SHEET #HW-507_06, DATED 9-18-2009

WEIGHT CHART	
PRODUCT	APPROX. WEIGHT
RISER SECTION	2,300 LBS./LF
SUMP SECTION	6,100 LBS.

UNITED CONCRETE PRODUCTS INC.
173 CHURCH STREET YALESVILLE, CT 06492 TEL. (800) 234-3119 TEL. (203) 269-3119 FAX. (203) 265-4941 WWW.UNITEDCONCRETE.COM

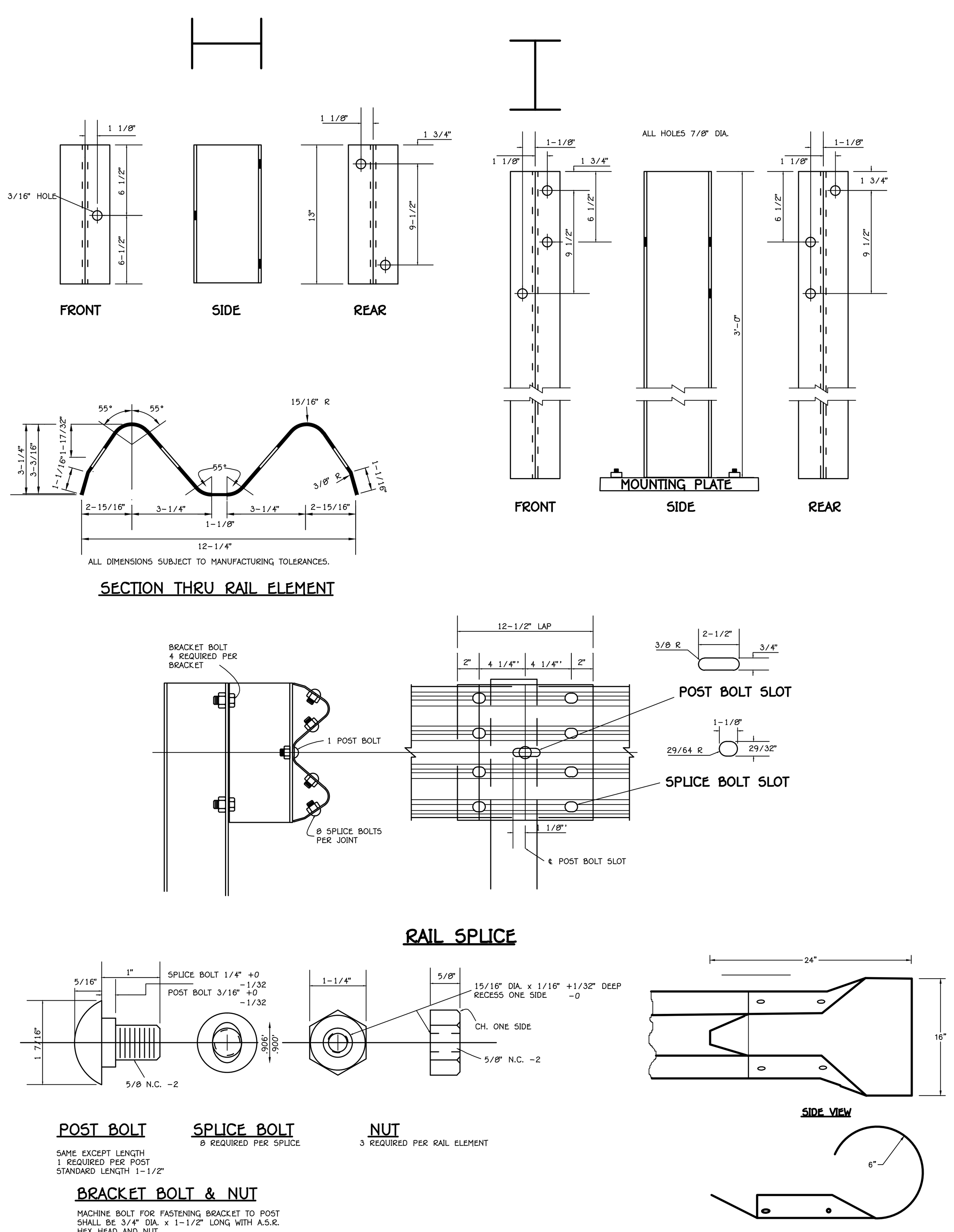

GUARD RAIL DETAILS

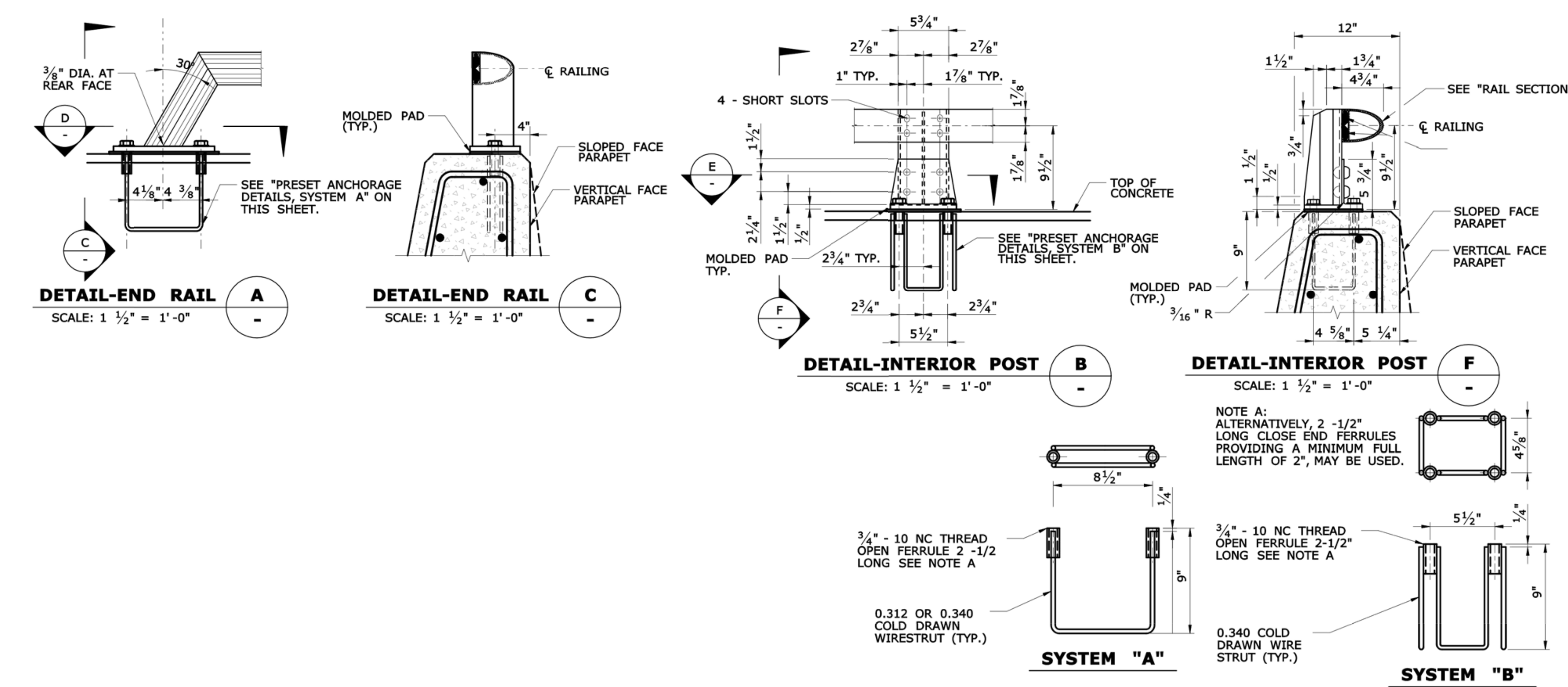

PRESET ANCHORAGE DETAILS
N.T.S.

NOTES:

ALUMINUM WELDING SHALL BE IN ACCORDANCE WITH THE AMERICAN WELDING SOCIETY "STRUCTURAL WELDING CODE-ALUMINUM", ANSI/AWS D1.2.

RIVETING SHALL BE DONE IN ACCORDANCE WITH ARTICLE 6.5 - RIVETING OF THE AASHTO SPECIFICATIONS FOR ALUMINUM STRUCTURES".

METAL BRIDGE RAIL: THE RAILING POSTS, POST CONNECTION DEVICES, SPLICE BARS AND RAILS SHALL BE EXTRUDED ALUMINUM AND CONFORM TO THE REQUIREMENTS OF ASTM B221, ALUMINUM ALLOY 6061-T6 OR 6005-T5.

SOCKET HEAD CAP SCREWS SHALL BE STAINLESS SHALL BE STAINLESS STEEL AND CONFORM TO THE REQUIREMENTS OF ASTM F837, GROUP 1 (ANSI TYPE 304).

ALL BOLTS SHALL BE STAINLESS STEEL AND CONFORMS TO THE REQUIREMENTS OF ASTM F593, GROUP 1, (ANSI TYPE 304). NUTS SHALL BE STAINLESS STEEL AND CONFORM TO THE REQUIREMENTS OF ASTM F594, GROUP 1. WASHERS SHALL BE STAINLESS AND CONFORM TO THE REQUIREMENTS OF ASTM A167, TYP302 THROUGHT 305.

CONE POINT RIVETS SHALL CONFORM TO ASTM B316, ALUMINUM ALLOY 6061-T6 OR ASTM B221, ALUMINUM ALLOY 6061-T-6.

LENGTHS OF RAIL ELEMENTS SHALL BE CONTINUOUS OVER FOUR RAIL POSTS WHEREVER POSSIBLE BUT IN NO CASE LESS THAN TWO. WELDING OF TWO OR MORE RAILS TO FORM AN ELEMENT WILL NOT BE ALLOWED. RAIL SPLICES SHALL BE LOCATED IN RAIL PANELS OVER OPEN JOINTS IN PARAPETS. SPLICE BARS SHALL HAVE A SLIDING FIT IN THE RAIL SECTIONS.

ALUMINUM RAILINGS SHALL BE CAREFULLY ADJUSTED PRIOR TO FIXING IN PLACE TO INSURE PROPER MATCHING AT ABUTTING JOINTS AND CORRECT ALIGNMENT AND CURVATURE THROUGHTOUT THEIR LENGTH. AFTER INSTALLATION, ALL RAILS AND POSTS SHALL BE FREE OF BURRS, SHARP EDGES AND IRREGULARITIES.

PRESET AHCHORAGES: THE WIRE STRUTS SHALL BE COLD-DRAWN ADN CONFORM TO ASTM A510, GRADE 1030. THE FERRULES SHALL CONFORM TO ASTM 108, GRADE 12L14. AFTER FABRICATION, THE PRESET ANCHORAGES SHALL BE HOT-DIP GALVANIZED IN ACCORDANCE WITH ASTM A153. THE BOLTS SHALL BE "FREE RUNNING" IN THE FERRULES AFTER GALVANIZATIION.

THE ANCHORAGE ASSEMBLIES SHALL BE INSTALLED PERPENDICULAR TO THE GRADE OF THE BRIDGE DECK. THE ANCHORAGES SHALL BE FIRMLY AND ACCURATELY HELD IN POSITION PRIOR TO AND DURING THE PLACING OF CONCRETE.

MOLDED PADS: MOLDED PADS SHALL BE MANUFACTURED FROM NEW UNVULCANIZED ELASTOMER AND UNUSED SYNTHETIC FIBERS, WITH A WEIGHT PROPORTION OF FIBER CONTENT EQUAL TO APPROXIMATELY ONE-HALF OF THE TOTAL WEIGHT OF THE PAD.

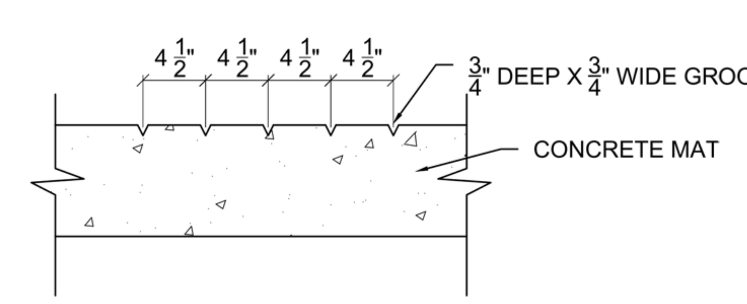

CONCRETE FUEL PAD DETAIL
(NOT TO SCALE)

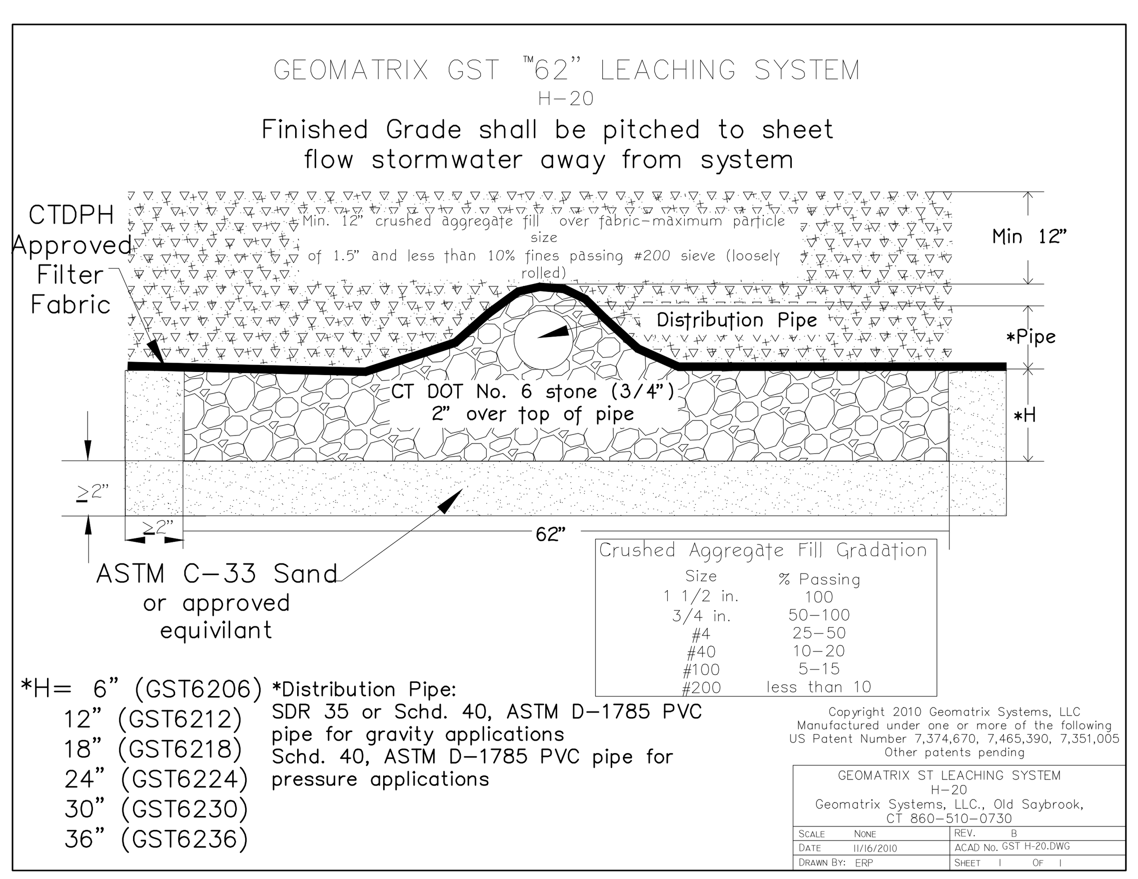

GEOMATRIX GST ™62" LEACHING SYSTEM
H-20

Finished Grade shall be pitched to sheet flow stormwater away from system

ASTM C-33 Sand or approved equivilant

Crushed Aggregate Fill Gradation	
Size	% Passing
1 1/2 in.	100
3/4 in.	50–100
#4	25–50
#40	10–20
#100	5–15
#200	less than 10

*H= 6" (GST6206)
12" (GST6212)
18" (GST6218)
24" (GST6224)
30" (GST6230)
36" (GST6236)

*Distribution Pipe:
SDR 35 or Schd. 40, ASTM D-1785 PVC pipe for gravity applications
Schd. 40, ASTM D-1785 PVC pipe for pressure applications

Copyright 2010 Geomatrix Systems, LLC
Manufactured under one or more of the following US Patent Number 7,374,670, 7,465,390, 7,351,005
Other patents pending

GEOMATRIX ST LEACHING SYSTEM
H-20
Geomatrix Systems, LLC., Old Saybrook, CT 860-510-0730

SCALE	NONE	REV.	B
DATE	11/16/2010	ACAD No.	GST H-20.DWG
DRAWN BY:	ERP	SHEET 1	OF 1

DETAILS

STUART J. FAIRBANK
CONN. P.E. #20206

BOUNDARY LINES OF ADJOINING PROPERTIES ARE SHOWN FOR GENERAL INFORMATIONAL PURPOSES ONLY AND ARE NOT TO BE CONSTRUED AS BEING ACCURATELY LOCATED OR DEPICTED.

©2016 – ANGUS McDONALD / GARY SHARPE & ASSOCIATES, INC.

THESE DRAWINGS ARE THE PROPERTY OF ANGUS MCDONALD/GARY SHARPE & ASSOCIATES, INC. AND HAVE BEEN SPECIFICALLY PREPARED FOR THE OWNER OF THIS PROJECT OR PROPERTY, THEY ARE NOT TO BE DUPLICATED OR USED IN PART OR WHOLE FOR ANY OTHER PURPOSE, PROJECT, LOCATION OR OWNER WITHOUT THE EXPRESS WRITTEN CONSENT OF ANGUS MCDONALD/GARY SHARPE & ASSOCIATES, INC.

THE WORD "CERTIFY", AS USED IS UNDERSTOOD TO BE AN EXPRESSION OF PROFESSIONAL OPINION BY THE ENGINEER OR SURVEYOR. IT IS A DECLARATORY STATEMENT WHICH IS BASED ON HIS BEST KNOWLEDGE, INFORMATION AND BELIEF. AS SUCH IT CONSTITUTES NEITHER GUARANTEE NOR WARRANTY, EXPRESSED OR IMPLIED, OF ANY INFORMATION CONTAINED HEREON. NO CERTIFICATION IS EXPRESSED OR IMPLIED ON ANY ORIGINAL OR ANY DUPLICATE OF THIS PLAN UNLESS IT BEARS AN ORIGINAL STAMP OR SEAL AND ORIGINAL SIGNATURE OF THE INDIVIDUAL WHOSE REGISTRATION NUMBER APPEARS HEREON.

LAND & MARINE — ENGINEERING — SURVEYING — PLANNING

ANGUS McDONALD
GARY SHARPE
& ASSOCIATES, INC.
SINCE 1966

P.O. BOX 608, 233 BOSTON POST ROAD
OLD SAYBROOK, CONNECTICUT 06475
TEL. (860) 388-4671 FAX (860) 388-3962

SITE DEVELOPMENT PLAN
PREPARED FOR
DEER RUN STABLE, LLC
1499 & 1505 HARTFORD NEW LONDON TURNPIKE
OAKDALE/MONTVILLE, CONNECTICUT

DATE: JULY 10, 2019		SCALE: AS SHOWN
DR'N DO'D	CK'D	APP'D
SHEET 8 of 11		JOB NO. 186333

REVISIONS: 1/13/20 REVISED PER COMMENTS, 2-20-20 UPDATED 2-27-20 PER TOWN PLANNER, 3-11-20

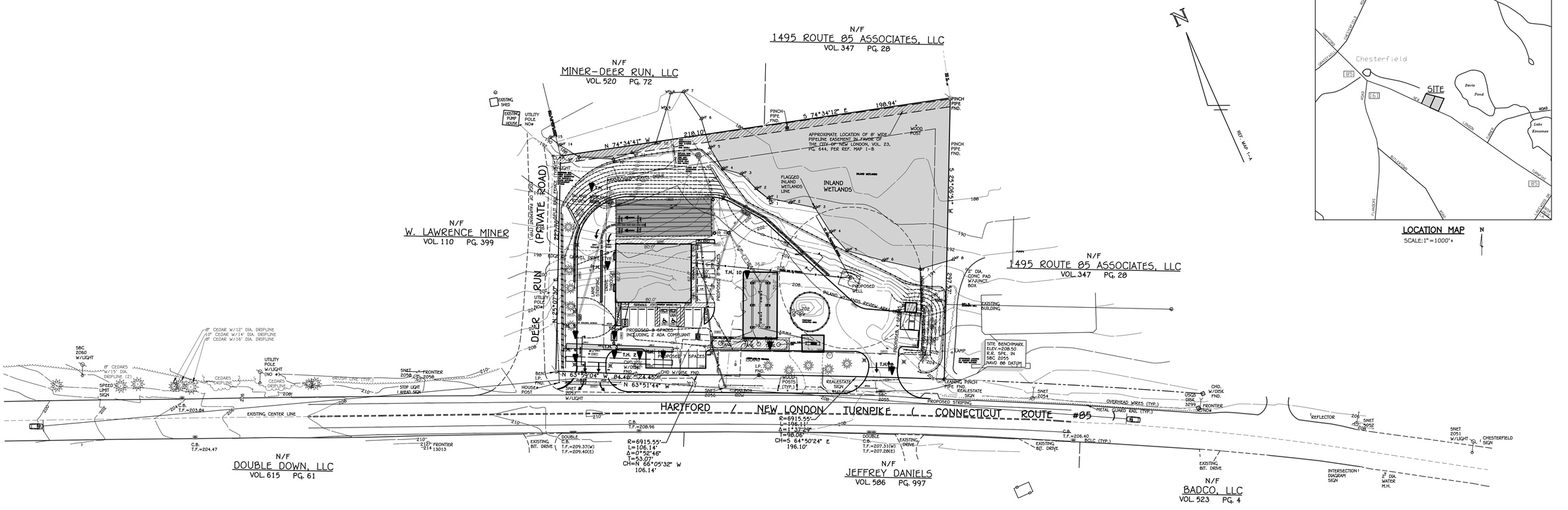

LOCATION MAP
SCALE: 1" = 1000' ±

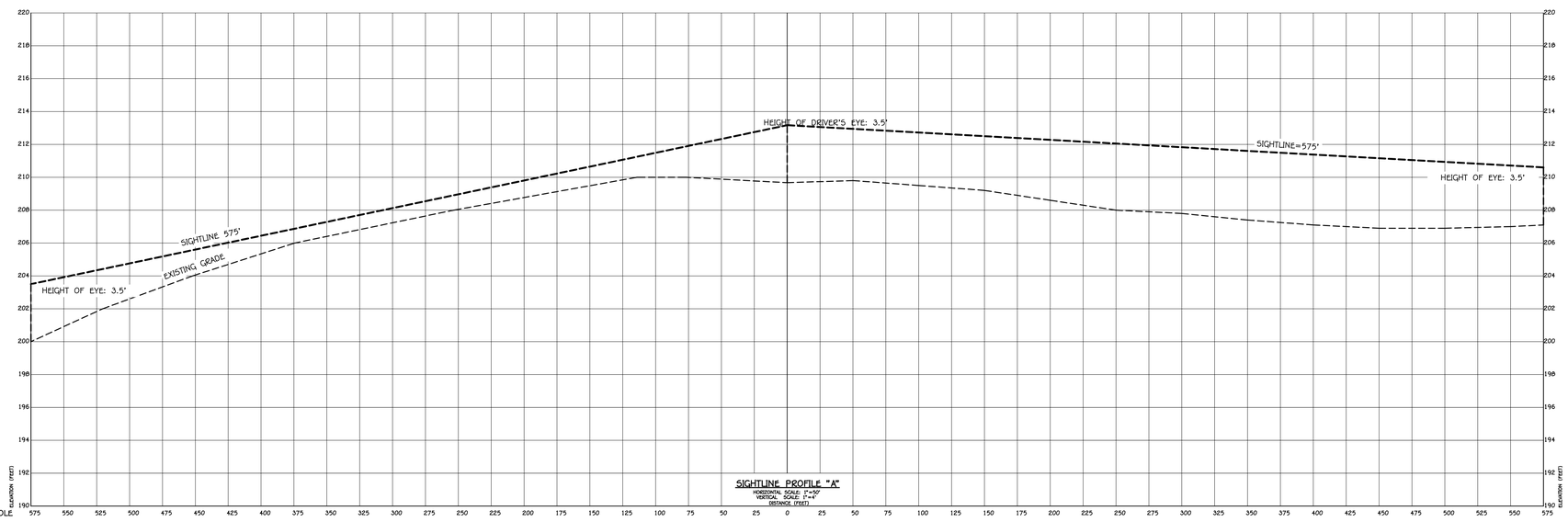

SIGHTLINE PROFILE "A"
HORIZONTAL SCALE: 1"=50'
VERTICAL SCALE: 1"=4'

NOTES:

1. REFERENCE IS MADE TO THE FOLLOWING MAPS:

   A. PROPERTY SURVEY MAP, PROPERTY OF, JOETTE J. GAREY, 1499 HARTFORD NEW LONDON TURNPIKE, OAKDALE/MONTVILLE, CONNECTICUT, DATE: FEBRUARY 21, 2018, BY ANGUS McDONALD/GARY SHARPE & ASSOCIATES, INC.

   B. SITE DEVELOPMENT PLAN, PROPERTIES OF, JOETTE J. GAREY, 1499 & 1505 HARTFORD NEW LONDON TURNPIKE, OAKDALE/MONTVILLE, CONNECTICUT, DATE: OCTOBER 31, 2018, BY ANGUS MCDONALD/GARY SHARPE & ASSOCIATES, INC.

   C. PROPERTY SURVEY AND SUBDIVISION PLAN, PROPERTY OF, W. LAWRENCE MINER, JR., REVOCABLE TRUST, HARTFORD ROAD (CONNECTICUT ROUTE 85) AND CHESTERFIELD ROAD, MONTVILLE, CONNECTICUT, DATE: JANUARY 20, 2000, REVISED THRU: 5/19100 BY: DICESARE-BENTLEY ENGINEERS, INC.

   D. PLAN SHOWING PROPERTY OF, ELIZABETH SADINSKY, ROUTE 85 AND OAKDALE-CHESTERFIELD ROAD, TOWN OF MONTVILLE, CONN., DATE: OCTOBER 1970, BY: DICESARE-BENTLEY-WELLING ENGR'S.

   E. TOWN ROADS, MONTVILLE, BY: CONNECTICUT DEPARTMENT OF TRANSPORTATION, REIVED TO DEC. 31, 1974, CGS DATA REVISED DEC. 15, 1999

   F. CONNECTICUT STATE HIGHWAY DEPARTMENT, RIGHT OF WAY MAP, TOWN OF MONTVILLE, HARTFORD-NEW LONDON ROAD, FROM THE KRUPCAL PROPERTY, SOUTHERLY ABOUT 5,550 FEET, ROUTE No. 102, SHEETS 1 & 2 OF 2, DATE: SEPT. 30-1930, REVISED: OCTOBER 16, 1967.

   G. TOWN OF MONTVILLE, ROUTE #85,PLAN SHOWING TAKING LINE AT, SADINSKY PROP. & ADJOINING PROP. OWNERS, BEGINNING AT ROUTE #161, FLANDERS ROAD, RUNNING SOUTHEASTERLY 2,300 FEET. DATE: JULY 1963.

   H. TOWN OF MONTVILLE, MAP SHOWING LAND AND EASEMENT ACQUIRED BY, THE STATE OF CONNECTICUT, FROM ELIZABETH K. SADINSKY, NEW LONDON TURNPIKE, DATE: DECEMBER 1940, SHEETS 1 & 2 OF 2.

2. FOR SUBJECT PROPERTY, REFERENCE IS MADE TO THE FOLLOWING DEEDS ON FILE IN THE TOWN OF MONTVILLE LAND RECORDS AS VOL. 581 PG. 49 & VOL. 638 PG. 521 AND LISTED ON ASSESSOR'S MAP 005 AS LOTS 24-00A & 23-00A

3. SUBJECT PROPERTY IS NOT IN A FLOOD HAZARD ZONE PER FEMA FLOOD INSURANCE RATE MAP, NEW LONDON COUNTY, CONNECTICUT, MAP NUMBER 09011C0337G, EFFECTIVE DATE: JULY 18, 2011

4. INLAND WETLANDS MARKED BY RICHARD SNARSKI, SOIL SCIENTIST. 2/15/2018 & 9/27/18 AND LOCATED BY FIELD SURVEY.

LEGEND

	UTILITY POLE
CHD	CONN. HIGHWAY DEPT. MONUMENT
FND.	FOUND
I.PIN	IRON PIN
I.P.	IRON PIPE
00	EXISTING CONTOURS
+0.00	EXISTING SPOT ELEVATION
	STONEWALL
00	EDGE OF WETLAND/FLAG NUMBER
	EDGE OF TREELINE
	RETAINING WALL
BCLC	BITUMINOUS CONCRETE LIP CURBING

SCALE IN FEET

BOUNDARY LINES OF ADJOINING PROPERTIES ARE SHOWN FOR GENERAL INFORMATIONAL PURPOSES ONLY AND ARE NOT TO BE CONSTRUED AS BEING ACCURATELY LOCATED OR DEPICTED.

©2019 – ANGUS McDONALD / GARY SHARPE & ASSOCIATES, INC.

THESE DRAWINGS ARE THE PROPERTY OF ANGUS MCDONALD/GARY SHARPE & ASSOCIATES, INC. AND HAVE BEEN SPECIFICALLY PREPARED FOR THE OWNER OF THIS PROJECT OR PROPERTY, THEY ARE NOT TO BE DUPLICATED OR USED IN PART OR WHOLE FOR ANY OTHER PURPOSE, PROJECT, LOCATION OR OWNER WITHOUT THE EXPRESS WRITTEN CONSENT OF ANGUS MCDONALD/GARY SHARPE & ASSOCIATES, INC.

THE WORD "CERTIFY", AS USED IS UNDERSTOOD TO BE AN EXPRESSION OF PROFESSIONAL OPINION BY THE ENGINEER OR SURVEYOR. IT IS A DECLARATORY STATEMENT WHICH IS BASED ON HIS BEST KNOWLEDGE, INFORMATION AND BELIEF. AS SUCH IT CONSTITUTES NEITHER GUARANTEE NOR WARRANTY, EXPRESSED OR IMPLIED, OF ANY INFORMATION CONTAINED HEREON. NO CERTIFICATION IS EXPRESSED OR IMPLIED ON ANY ORIGINAL OR ANY DUPLICATE OF THIS PLAN UNLESS IT BEARS AN ORIGINAL STAMP OR SEAL AND ORIGINAL SIGNATURE OF THE INDIVIDUAL WHOSE REGISTRATION NUMBER APPEARS HEREON.

CERTIFICATION NOTES:

1. THIS SURVEY PLAN HAS BEEN PREPARED PURSUANT TO THE REGULATIONS OF CONNECTICUT STATE AGENCIES SECTION 20-300b-1 THROUGH 20-300b-20 AND THE "STANDARDS FOR SURVEYS AND MAPS IN THE STATE OF CONNECTICUT" AS ADOPTED BY THE CONNECTICUT ASSOCIATION OF LAND SURVEYORS, INC. ON SEPTEMBER 26, 1996.

   A. TYPE OF SURVEY: IMPROVEMENT LOCATION SURVEY
   B. BOUNDARY DETERMINATION: RESURVEY
   C. THIS SURVEY CONFORMS TO THE STANDARDS AND ACCURACY OF CLASS A-2 & T-2

ANGUS L. McDONALD JR.
CONN. L.S. #70173

TO MY KNOWLEDGE AND BELIEF THIS MAP IS SUBSTANTIALLY CORRECT AS NOTED HEREON.

LAND & MARINE PLANNING ENGINEERING SURVEYING

ANGUS McDONALD
GARY SHARPE
& ASSOCIATES, INC.
SINCE 1966

P.O. BOX 608, 233 BOSTON POST ROAD
OLD SAYBROOK, CONNECTICUT 06475
TEL. (860) 388-4671 FAX (860) 388-3962

SIGHTLINE DEMOSTRATION
PREPARED FOR
DEER RUN STABLE, LLC
FOR PROPERTIES LOCATED AT
1499 & 1505 HARTFORD NEW LONDON TURNPIKE
OAKDALE/MONTVILLE, CONNECTICUT

DATE: JULY 10, 2019	SCALE: 1"=50'	
DR'N DO'D	CK'D	APP'D
SHEET 9 of 11	JOB NO. 186333	

REVISIONS: 2-20-20 UPDATED, 2-27-20 PER TOWN PLANNER

F:\Jobs2018\6333-Chisolm-Montville\Deer\Site Development Plan 3-25-2020 new layout.dwg, 9 of 11-sight line 50 A, 3/25/2020 8:38:16 AM

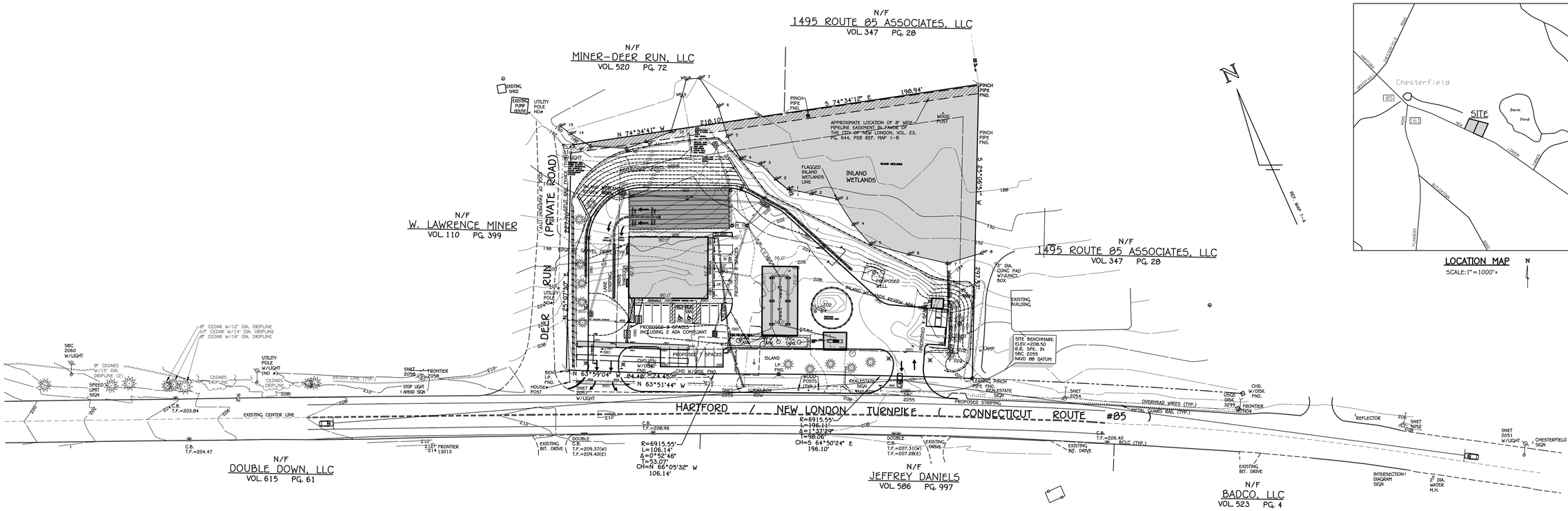

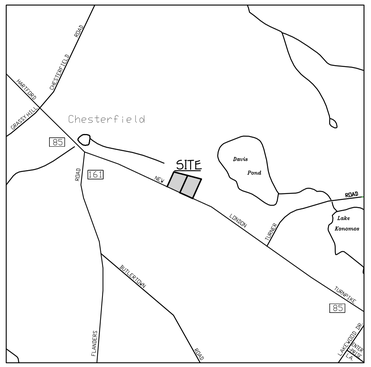

LOCATION MAP
SCALE: 1" = 1000' ±

NOTES:

1. REFERENCE IS MADE TO THE FOLLOWING MAPS:

   A. PROPERTY SURVEY MAP, PROPERTY OF, JOETTE J. GAREY, 1499 HARTFORD NEW LONDON TURNPIKE, OAKDALE/MONTVILLE, CONNECTICUT, DATE: FEBRUARY 21, 2018, BY ANGUS McDONALD/GARY SHARPE & ASSOCIATES, INC.

   B. SITE DEVELOPMENT PLAN, PROPERTIES OF, JOETTE J. GAREY, 1499 & 1505 HARTFORD NEW LONDON TURNPIKE, OAKDALE/MONTVILLE, CONNECTICUT, DATE: OCTOBER 31, 2018, BY ANGUS MCDONALD/GARY SHARPE & ASSOCIATES, INC.

   C. PROPERTY SURVEY AND SUBDIVISION PLAN, PROPERTY OF, W. LAWRENCE MINER, JR., REVOCABLE TRUST, HARTFORD ROAD (CONNECTICUT ROUTE 85) AND CHESTERFIELD ROAD, MONTVILLE, CONNECTICUT, DATE: JANUARY 20, 2000, REVISED THRU: 5/19100 BY: DICESARE-BENTLEY ENGINEERS, INC.

   D. PLAN SHOWING PROPERTY OF, ELIZABETH SADINSKY, ROUTE 85 AND OAKDALE-CHESTERFIELD ROAD, TOWN OF MONTVILLE, CONN., DATE: OCTOBER 1970, BY: DICESARE-BENTLEY-WELLING ENGR'S.

   E. TOWN ROADS, MONTVILLE, BY: CONNECTICUT DEPARTMENT OF TRANSPORTATION, REIVED TO DEC. 31, 1974, CGS DATA REVISED DEC. 15, 1999

   F. CONNECTICUT STATE HIGHWAY DEPARTMENT, RIGHT OF WAY MAP, TOWN OF MONTVILLE, HARTFORD-NEW LONDON ROAD, FROM THE KRUPCAL PROPERTY, SOUTHERLY ABOUT 5,550 FEET, ROUTE No. 102, SHEETS 1 & 2 OF 2, DATE: SEPT. 30-1930, REVISED: OCTOBER 16, 1967.

   G. TOWN OF MONTVILLE, ROUTE #85,PLAN SHOWING TAKING LINE AT, SADINSKY PROP. & ADJOINING PROP. OWNERS, BEGINNING AT ROUTE #161, FLANDERS ROAD, RUNNING SOUTHEASTERLY 2,300 FEET. DATE: JULY 1963.

   H. TOWN OF MONTVILLE, MAP SHOWING LAND AND EASEMENT ACQUIRED BY, THE STATE OF CONNECTICUT, FROM ELIZABETH K. SADINSKY, NEW LONDON TURNPIKE, DATE: DECEMBER 1948, SHEETS 1 & 2 OF 2.

2. FOR SUBJECT PROPERTY, REFERENCE IS MADE TO THE FOLLOWING DEEDS ON FILE IN THE TOWN OF MONTVILLE LAND RECORDS AS VOL. 581 PG. 49 & VOL. 638 PG. 521 AND LISTED ON ASSESSOR'S MAP 005 AS LOTS 24-00A & 23-00A

3. SUBJECT PROPERTY IS NOT IN A FLOOD HAZARD ZONE PER FEMA FLOOD INSURANCE RATE MAP, NEW LONDON COUNTY, CONNECTICUT, MAP NUMBER 09011C0337G, EFFECTIVE DATE: JULY 18, 2011

4. INLAND WETLANDS MARKED BY RICHARD SNARSKI, SOIL SCIENTIST, 2/15/2018 & 9/27/18 AND LOCATED BY FIELD SURVEY.

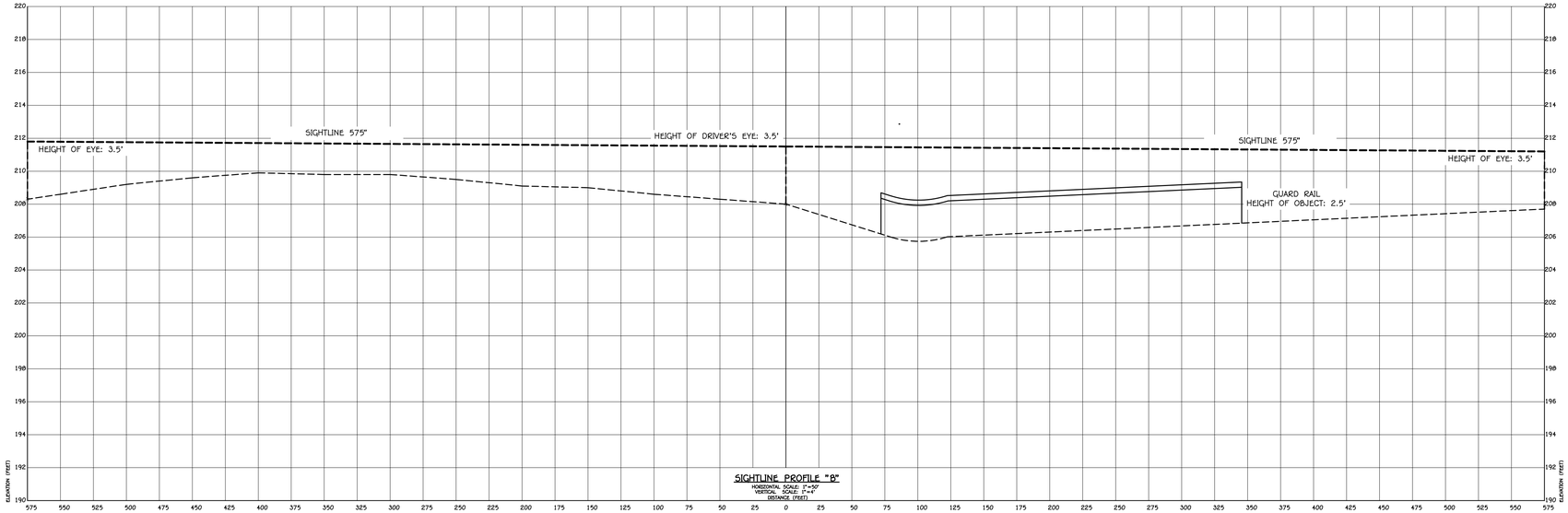

SIGHTLINE PROFILE "B"
HORIZONTAL SCALE: 1"=50'
VERTICAL SCALE: 1"=4'
DISTANCE (FEET)

LEGEND

	UTILITY POLE
CHD	CONN. HIGHWAY DEPT. MONUMENT
FND.	FOUND
I.PIN	IRON PIN
I.P.	IRON PIPE
D.H.	DRILL HOLE
00	EXISTING CONTOURS
0.00	EXISTING SPOT ELEVATION
	STONEWALL
00	EDGE OF WETLAND/FLAG NUMBER
	EDGE OF TREELINE
	RETAINING WALL
BCLC	BITUMINOUS CONCRETE LIP CURBING

50 37.5 25 12.5 0 50 100 150
SCALE IN FEET

BOUNDARY LINES OF ADJOINING PROPERTIES ARE SHOWN FOR GENERAL INFORMATIONAL PURPOSES ONLY AND ARE NOT TO BE CONSTRUED AS BEING ACCURATELY LOCATED OR DEPICTED.

©2019 – ANGUS McDONALD / GARY SHARPE & ASSOCIATES, INC.

THESE DRAWINGS ARE THE PROPERTY OF ANGUS MCDONALD/GARY SHARPE & ASSOCIATES, INC. AND HAVE BEEN SPECIFICALLY PREPARED FOR THE OWNER OF THIS PROJECT OR PROPERTY, THEY ARE NOT TO BE DUPLICATED OR USED IN PART OR WHOLE FOR ANY OTHER PURPOSE, PROJECT, LOCATION OR OWNER WITHOUT THE EXPRESS WRITTEN CONSENT OF ANGUS MCDONALD/GARY SHARPE & ASSOCIATES, INC.

THE WORD "CERTIFY", AS USED IS UNDERSTOOD TO BE AN EXPRESSION OF PROFESSIONAL OPINION BY THE ENGINEER OR SURVEYOR. IT IS A DECLARATORY STATEMENT WHICH IS BASED ON HIS BEST KNOWLEDGE, INFORMATION AND BELIEF. AS SUCH IT CONSTITUTES NEITHER GUARANTEE NOR WARRANTY, EXPRESSED OR IMPLIED, OF ANY INFORMATION CONTAINED HEREON. NO CERTIFICATION IS EXPRESSED OR IMPLIED ON ANY ORIGINAL OR ANY DUPLICATE OF THIS PLAN UNLESS IT BEARS AN ORIGINAL STAMP OR SEAL AND ORIGINAL SIGNATURE OF THE INDIVIDUAL WHOSE REGISTRATION NUMBER APPEARS HEREON.

CERTIFICATION NOTES:

1. THIS SURVEY PLAN HAS BEEN PREPARED PURSUANT TO THE REGULATIONS OF CONNECTICUT STATE AGENCIES SECTION 20-300b-1 THROUGH 20-300b-20 AND THE "STANDARDS FOR SURVEYS AND MAPS IN THE STATE OF CONNECTICUT" AS ADOPTED BY THE CONNECTICUT ASSOCIATION OF LAND SURVEYORS, INC. ON SEPTEMBER 26, 1996.

   A. TYPE OF SURVEY: IMPROVEMENT LOCATION SURVEY
   B. BOUNDARY DETERMINATION: RESURVEY
   C. THIS SURVEY CONFORMS TO THE STANDARDS AND ACCURACY OF CLASS A-2 & T-2

ANGUS L. McDONALD JR.
CONN. L.S. #70173

TO MY KNOWLEDGE AND BELIEF THIS MAP IS SUBSTANTIALLY CORRECT AS NOTED HEREON.

LAND & MARINE SURVEYING PLANNING ENGINEERING

ANGUS McDONALD
GARY SHARPE
& ASSOCIATES, INC.
SINCE 1966

P.O. BOX 608, 233 BOSTON POST ROAD
OLD SAYBROOK, CONNECTICUT 06475
TEL. (860) 388-4671 FAX (860) 388-3962

SIGHTLINE DEMOSTRATION
PREPARED FOR
DEER RUN STABLE, LLC
FOR PROPERTIES LOCATED AT
1499 & 1505 HARTFORD NEW LONDON TURNPIKE
OAKDALE/MONTVILLE, CONNECTICUT

DATE: JULY 10, 2019		SCALE: 1"=50'
DR'N DO'D	CK'D	APP'D
SHEET 10 of 11		JOB NO. 186333
REVISIONS: 2-20-20 UPDATED, 2-27-20 PER TOWN PLANNER		

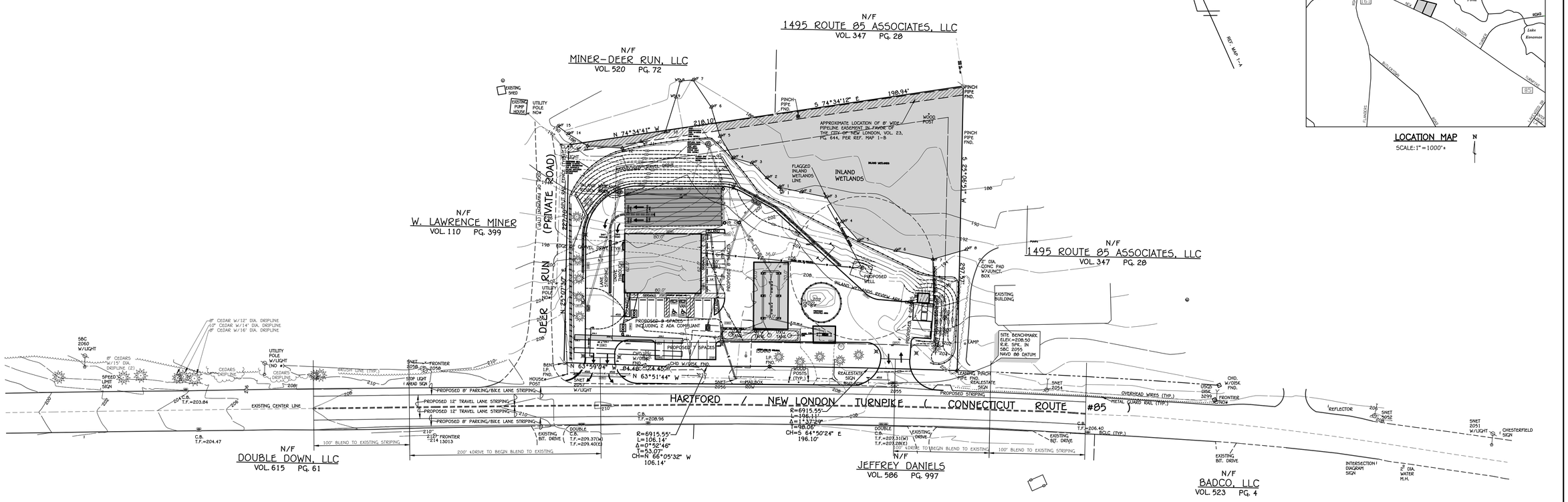

NOTES:

1. REFERENCE IS MADE TO THE FOLLOWING MAPS:

   A. PROPERTY SURVEY MAP, PROPERTY OF, JOETTE J. GAREY, 1499 HARTFORD NEW LONDON TURNPIKE, OAKDALE/MONTVILLE, CONNECTICUT, DATE: FEBRUARY 21, 2018, BY ANGUS McDONALD/GARY SHARPE & ASSOCIATES, INC.

   B. SITE DEVELOPMENT PLAN, PROPERTIES OF, JOETTE J. GAREY, 1499 & 1505 HARTFORD NEW LONDON TURNPIKE, OAKDALE/MONTVILLE, CONNECTICUT, DATE: OCTOBER 31, 2018, BY ANGUS MCDONALD/GARY SHARPE & ASSOCIATES, INC.

   C. PROPERTY SURVEY AND SUBDIVISION PLAN, PROPERTY OF, W. LAWRENCE MINER, JR., REVOCABLE TRUST, HARTFORD ROAD (CONNECTICUT ROUTE 85) AND CHESTERFIELD ROAD, MONTVILLE, CONNECTICUT, DATE: JANUARY 20, 2000, REVISED THRU: 5/19100 BY: DICESARE-BENTLEY ENGINEERS, INC.

   D. PLAN SHOWING PROPERTY OF, ELIZABETH SADINSKY, ROUTE 85 AND OAKDALE-CHESTERFIELD ROAD, TOWN OF MONTVILLE, CONN., DATE: OCTOBER 1970, BY: DICESARE-BENTLEY-WELLING ENGR'S.

   E. TOWN ROADS, MONTVILLE, BY: CONNECTICUT DEPARTMENT OF TRANSPORTATION, REIVED TO DEC. 31, 1974, CGS DATA REVISED DEC. 15, 1999

   F. CONNECTICUT STATE HIGHWAY DEPARTMENT, RIGHT OF WAY MAP, TOWN OF MONTVILLE, HARTFORD-NEW LONDON ROAD, FROM THE KRUPCAL PROPERTY, SOUTHERLY ABOUT 5,550 FEET, ROUTE No. 102, SHEETS 1 & 2 OF 2, DATE: SEPT. 30-1930, REVISED: OCTOBER 16, 1967.

   G. TOWN OF MONTVILLE, ROUTE #85,PLAN SHOWING TAKING LINE AT, SADINSKY PROP. & ADJOINING PROP. OWNERS, BEGINNING AT ROUTE #161, FLANDERS ROAD, RUNNING SOUTHEASTERLY 2,300 FEET. DATE: JULY 1963.

   H. TOWN OF MONTVILLE, MAP SHOWING LAND AND EASEMENT ACQUIRED BY, THE STATE OF CONNECTICUT, FROM ELIZABETH K. SADINSKY, NEW LONDON TURNPIKE, DATE: DECEMBER 1948, SHEETS 1 & 2 OF 2.

2. FOR SUBJECT PROPERTY, REFERENCE IS MADE TO THE FOLLOWING DEEDS ON FILE IN THE TOWN OF MONTVILLE LAND RECORDS AS VOL. 581 PG. 49 & VOL. 638 PG. 521 AND LISTED ON ASSESSOR'S MAP 005 AS LOTS 24-00A & 23-00A

3. SUBJECT PROPERTY IS NOT IN A FLOOD HAZARD ZONE PER FEMA FLOOD INSURANCE RATE MAP, NEW LONDON COUNTY, CONNECTICUT, MAP NUMBER 09011C0337G, EFFECTIVE DATE: JULY 18, 2011

4. INLAND WETLANDS MARKED BY RICHARD SNARSKI, SOIL SCIENTIST, 2/15/2018 & 9/27/18 AND LOCATED BY FIELD SURVEY.

LEGEND

	UTILITY POLE
CHD	CONN. HIGHWAY DEPT. MONUMENT
FND.	FOUND
I.PIN	IRON PIN
I.P.	IRON PIPE
00	EXISTING CONTOURS
+0.00	EXISTING SPOT ELEVATION
	STONEWALL
00	EDGE OF WETLAND/FLAG NUMBER
	EDGE OF TREELINE
	RETAINING WALL
BCLC	BITUMINOUS CONCRETE LIP CURBING

BOUNDARY LINES OF ADJOINING PROPERTIES ARE SHOWN FOR GENERAL INFORMATIONAL PURPOSES ONLY AND ARE NOT TO BE CONSTRUED AS BEING ACCURATELY LOCATED OR DEPICTED.

©2019 – ANGUS McDONALD / GARY SHARPE & ASSOCIATES, INC.

THESE DRAWINGS ARE THE PROPERTY OF ANGUS MCDONALD/GARY SHARPE & ASSOCIATES, INC. AND HAVE BEEN SPECIFICALLY PREPARED FOR THE OWNER OF THIS PROJECT OR PROPERTY, THEY ARE NOT TO BE DUPLICATED OR USED IN PART OR WHOLE FOR ANY OTHER PURPOSE, PROJECT, LOCATION OR OWNER WITHOUT THE EXPRESS WRITTEN CONSENT OF ANGUS MCDONALD/GARY SHARPE & ASSOCIATES, INC.

THE WORD "CERTIFY", AS USED IS UNDERSTOOD TO BE AN EXPRESSION OF PROFESSIONAL OPINION BY THE ENGINEER OR SURVEYOR. IT IS A DECLARATORY STATEMENT WHICH IS BASED ON HIS BEST KNOWLEDGE, INFORMATION AND BELIEF, AS SUCH IT CONSTITUTES NEITHER GUARANTEE NOR WARRANTY, EXPRESSED OR IMPLIED, OF ANY INFORMATION CONTAINED HEREON. NO CERTIFICATION IS EXPRESSED OR IMPLIED ON ANY ORIGINAL OR ANY DUPLICATE OF THIS PLAN UNLESS IT BEARS AN ORIGINAL STAMP OR SEAL AND ORIGINAL SIGNATURE OF THE INDIVIDUAL WHOSE REGISTRATION NUMBER APPEARS HEREON.

CERTIFICATION NOTES:

1. THIS SURVEY PLAN HAS BEEN PREPARED PURSUANT TO THE REGULATIONS OF CONNECTICUT STATE AGENCIES SECTION 20-300b-1 THROUGH 20-300b-20 AND THE "STANDARDS FOR SURVEYS AND MAPS IN THE STATE OF CONNECTICUT" AS ADOPTED BY THE CONNECTICUT ASSOCIATION OF LAND SURVEYORS, INC. ON SEPTEMBER 26, 1996.

   A. TYPE OF SURVEY: IMPROVEMENT LOCATION SURVEY
   B. BOUNDARY DETERMINATION: RESURVEY
   C. THIS SURVEY CONFORMS TO THE STANDARDS AND ACCURACY OF CLASS A-2 & T-2

ANGUS L. McDONALD JR.
CONN. L.S. #70173

TO MY KNOWLEDGE AND BELIEF THIS MAP IS SUBSTANTIALLY CORRECT AS NOTED HEREON.

LAND & MARINE ENGINEERING SURVEYING PLANNING

ANGUS McDONALD
GARY SHARPE
& ASSOCIATES, INC.
SINCE 1966
P.O. BOX 608, 233 BOSTON POST ROAD
OLD SAYBROOK, CONNECTICUT 06475
TEL (860) 388-4671 FAX (860) 388-3962

50 37.5 25 12.5 0 50 100 150
SCALE IN FEET

HIGHWAY RESTRIPING PLAN

PREPARED FOR

DEER RUN STABLE, LLC

FOR PROPERTIES LOCATED AT

1499 & 1505 HARTFORD NEW LONDON TURNPIKE OAKDALE/MONTVILLE, CONNECTICUT

DATE: JULY 10, 2019	SCALE: 1"=50'	
DR'N DO'D	CK'D	APP'D
SHEET 11 of 11	JOB NO. 186333	

REVISIONS: 2-20-20 UPDATED, 2-27-20 PER TOWN PLANNER

F:\Jobs2018\6333-Chisolms-Montville\Dwg\Site Development Plan 3-25-2020 new layout.dwg, 11 of 11-proposed striping, 3/25/2020 8:39:31 AM