GENERAL NOTES

1. MILONE & MACBROOM INC. ACCEPTS NO RESPONSIBILITY FOR THE ACCURACY OF MAPS AND DATA WHICH HAVE BEEN SUPPLIED BY OTHERS.
2. NORTH ARROW, BEARINGS AND COORDINATES ARE BASED UPON THE CONNECTICUT COORDINATE SYSTEM (NAD 1983)
3. INLAND WETLANDS IDENTIFIED AND LOCATED BY MILONE AND MACBROOM INC., FEBRUARY 2006
4. ALL CONSTRUCTION MATERIALS AND METHODS SHALL CONFORM TO THE TOWN'S REQUIREMENTS AND TO THE APPLICABLE SECTIONS OF THE STATE OF CONNECTICUT DEPARTMENT OF TRANSPORTATION STANDARD SPECIFICATION FOR ROADS, BRIDGES, FACILITIES AND INCIDENTAL CONSTRUCTION, FORM 817 AND ADDENDUMS.
5. THE PLANS REQUIRE A CONTRACTOR'S WORKING KNOWLEDGE OF LOCAL, MUNICIPAL, AND STATE CODES FOR UTILITY SYSTEMS. ANY CONFLICTS BETWEEN MATERIALS AND LOCATIONS SHOWN AND LOCAL REQUIREMENTS SHALL BE BROUGHT TO THE ENGINEER'S ATTENTION PRIOR TO THE EXECUTION OF THE WORK. THE ENGINEER WILL NOT BE HELD LIABLE FOR COSTS INCURRED TO IMPLEMENT OR CORRECT WORK WHICH DOES NOT CONFORM TO LOCAL CODE.
6. ALL DIMENSIONS AND ELEVATIONS SHALL BE VERIFIED IN THE FIELD PRIOR TO CONSTRUCTION. ANY DISCREPANCIES SHALL BE BROUGHT TO THE ATTENTION OF THE ENGINEER IMMEDIATELY FOR DETERMINATION.
7. ALL UTILITY SERVICES ARE TO BE UNDERGROUND. THE EXACT LOCATION AND SIZE OF ELECTRIC, TELEPHONE, AND CABLE ARE TO BE DETERMINED BY THE RESPECTIVE UTILITY COMPANIES.
8. SEDIMENT AND EROSION CONTROL MEASURES AS DEPICTED ON THESE PLANS AND DESCRIBED WITHIN THE SEDIMENT AND EROSION CONTROL NARRATIVE SHALL BE IMPLEMENTED AND MAINTAINED UNTIL PERMANENT COVER AND STABILIZATION IS ESTABLISHED. ALL SEDIMENT AND EROSION CONTROL MEASURES SHALL CONFORM TO THE "2002 CONNECTICUT GUIDELINES FOR SOIL EROSION AND SEDIMENT CONTROL", AND IN ALL CASES BEST MANAGEMENT PRACTICES SHALL PREVAIL.
9. SEDIMENT AND EROSION CONTROL MEASURES AS DEPICTED ON THESE PLANS SHALL BE IMPLEMENTED AND MAINTAINED UNTIL PERMANENT COVER AND STABILIZATION HAS BEEN ESTABLISHED.
10. COMPLIANCE WITH THE PERMIT CONDITIONS IS THE RESPONSIBILITY OF BOTH THE CONTRACTOR AND THE PERMITEE.
11. SUBSURFACE SEWAGE DISPOSAL SYSTEM AREA TO BE STAKED OUT AND MARKED TO PREVENT DISTURBANCE FROM OTHER CONSTRUCTION ACTIVITIES.
12. BASED UPON AVAILABLE INFORMATION THERE ARE NO SEPTIC SYSTEMS OR WATER SUPPLY WELL WITHIN THE REQUIRED SEPARATION DISTANCES OF THE PROPOSED LEACHING SYSTEM.
13. ENGINEER TO STAKE LOCATION OF SEPTIC SYSTEM WITH ELEVATIONS FOR BOTTOM OF LEACHING GALLERIES AND SET BENCH MARK IN AREA OF SYSTEM.
14. ALL DISTURBED AREAS SHALL RECEIVE A MINIMUM OF 4" TOPSOIL, AND BE SEEDED WITH GRASS OR SOD, AS SHOWN ON THE PLANS.

SURVEY NOTES

1. THIS SURVEY AND MAP HAS BEEN PREPARED IN ACCORDANCE WITH SECTIONS 20-300B-1 THROUGH 20-300B-20 OF THE REGULATIONS OF CONNECTICUT STATE AGENCIES "MINIMUM STANDARDS FOR SURVEYS AND MAPS IN THE STATE OF CONNECTICUT" AS ENDORSED BY THE CONNECTICUT ASSOCIATION OF LAND SURVEYORS, INC. IT IS AN IMPROVEMENT LOCATION SURVEY BASED ON A DEPENDENT RESURVEY CONFORMING TO HORIZONTAL ACCURACY CLASS A-2.
2. NORTH BASED UPON THE CONNECTICUT STATE PLANE COORDINATE SYSTEM (NAD 1983) ESTABLISED BY G.P.S
3. NFORMATION REGARDING THE LOCATION OF EXISTING UNDERGROUND UTILITIES HAS BEEN BASED UPON AVAILABLE INFORMATION AND MAY BE INCOMPLETE AND WHERE SHOWN SHOULD BE CONSIDERED APPROXIMATE. THE LOCATION OF ALL EXISTING UTILITIES SHOULD BE CONFIRMED PRIOR TO BEGINNING CONSTRUCTION. CALL "CALL BEFORE YOU DIG" 1-800-922-4455. ALL UTILITY LOCATIONS THAT DO NOT MATCH THE VERTICAL OR HORIZONTAL CONTROL SHOWN ON THE PLAN SHALL IMMEDIATELY BE BROUGHT TO THE ATTENTION OF THE ENGINEER FOR RESOLUTION.
5. CURRENT ZONING DISTRICT = R-40 RESIDENTIAL

Construction Sequence for Wetlands Crossing

1. A licensed surveyor shall stake out the location of the following items prior to construction:
   a. Property lines adjacent to the crossing, wetland flags WLw-1 through WLw-3, WLw-200 through WL-w212 and WLw-219 through WLw-225 and associated 50' town regulated upland boundary as shown on the site plans.
   b. Limit of clearing associated with the proposed driveway.
   c. Centerline of proposed driveway with cut and fill depths.
2. Install a perimeter silt fence and sediment controls as shown on the site plans.
3. Clear and grub the area of access road up to the northern side of the first crossing.
4. Install water bars and stone check dams on the northern side of the crossing.
5. Install stone access drive to the northern side of crossing.
6. Remove organic material at the crossing and stockpile for later use.
7. All dewatering waste waters shall be discharged in a manner which minimizes the discoloration of the receiving waters.
8. Install seepage envelope, drainage pipes, riprap pads and pervious fill to span the crossing.
9. Install perimeter silt fence and sediment controls on the south side of the first crossing along the access drive as shown on the site plans.
10. Clear and grub each area of access road up to northern side of the second crossing.
11. Repeat steps 4 through 8 for second crossing.
12. Install perimeter silt fence and sediment controls on south side of the second crossing along the access drive as shown on the site plans.
13. Install buried utility conduits as required through the crossing.
14. Clear and grub the access drive to the Lot 4 property boundary.
15. Install remaining portion of stone access drive to Lot 4 property boundary.
16. Topsoil, seed and mulch access road shoulders and install plantings as shown on the site plans.

General Erosion Control Notes

a. Sediment and erosion controls shall be inspected at least once a week and within 24 hours of the end of a storm with a rainfall amount of 0.5 inch or greater.
b. The sediment and erosion control plan shall be modified by the contractor at the direction of the engineer and the towns' designated representative as necessitated by changing site conditions.
c. Inspection of the crossing and access road shall continue for a period of three months after completion when rainfalls of one inch or more occur.

Wetlands Crossing General Notes

1. All equipment and materials stored on site shall be located outside designated wetland areas. All storage areas shall be ringed with hay bales and silt fence.
2. No refueling operations shall take place within 100' of any wetlands area.
3. The contractor shall minimize equipment fording wetlands until the crossing is completed.
4. Unless otherwise noted, all construction vehicles shall remain on the access road.
5. All sedimentation and erosion controls shall conform to the 2002 Connecticut Guidelines for Soil Erosion and Sediment Control.
6. Crossing installation should occur during low flow, between June 1 to September 30. The contractor will monitor weather conditions, and shall not work during significant rain events.
7. Time for crossings construction should take between four to eight weeks to complete construction.

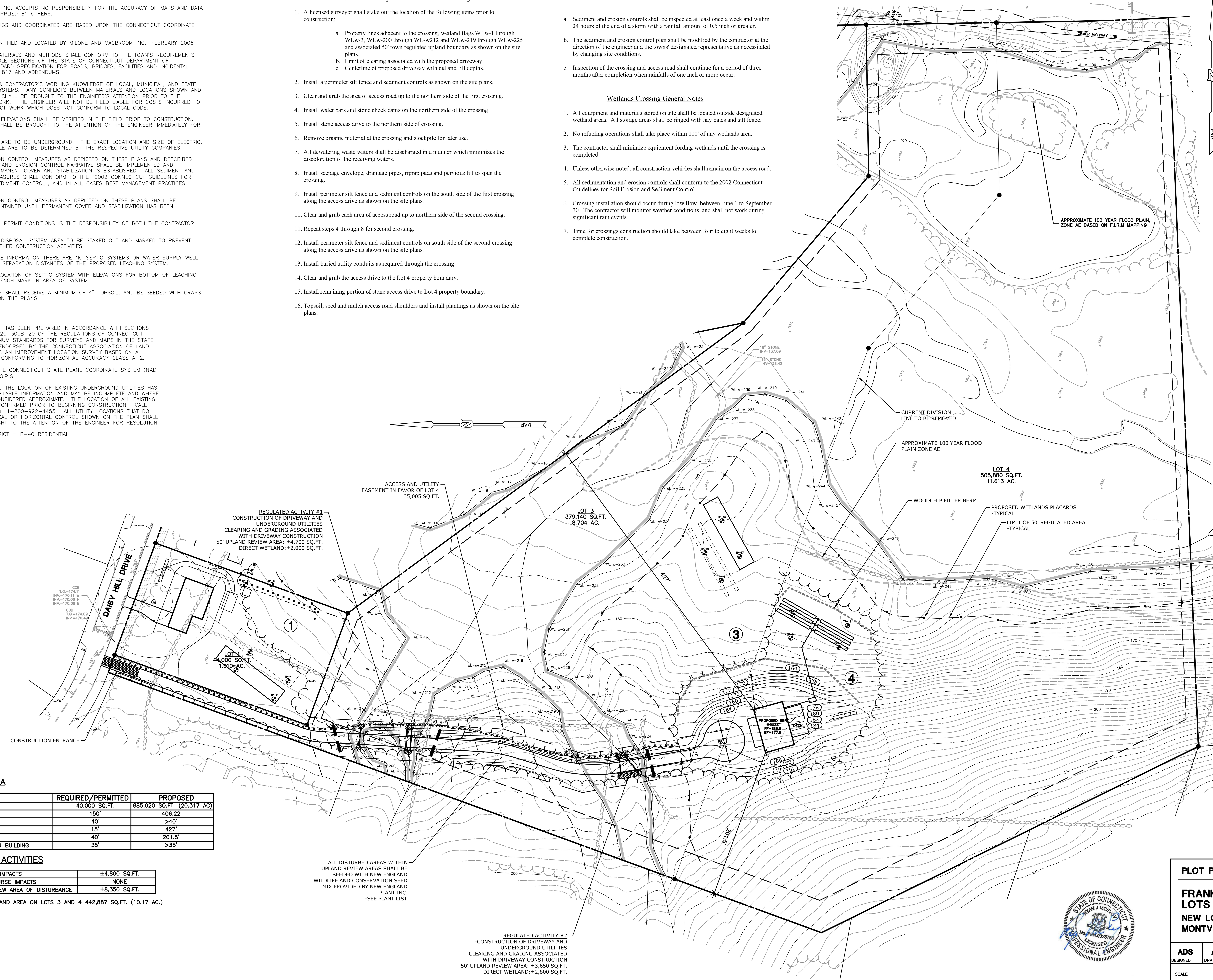

ZONING DATA

ZONE R-40	REQUIRED/PERMITTED	PROPOSED
MIN. LOT AREA	40,000 SQ.FT.	885,020 SQ.FT. (20.317 AC)
MIN. LOT WIDTH	150'	406.22
FRONT SETBACK	40'	>40'
SIDE SETBACK	15'	427'
REAR SETBACK	40'	201.5'
MAX. HEIGHT MAIN BUILDING	35'	>35'

REGULATED ACTIVITIES

DIRECT WETLAND IMPACTS	±4,800 SQ.FT.
DIRECT WATERCOURSE IMPACTS	NONE
50' UPLAND REVIEW AREA OF DISTURBANCE	±8,350 SQ.FT.

NOTE: TOTAL WETLAND AREA ON LOTS 3 AND 4 442,887 SQ.FT. (10.17 AC.)

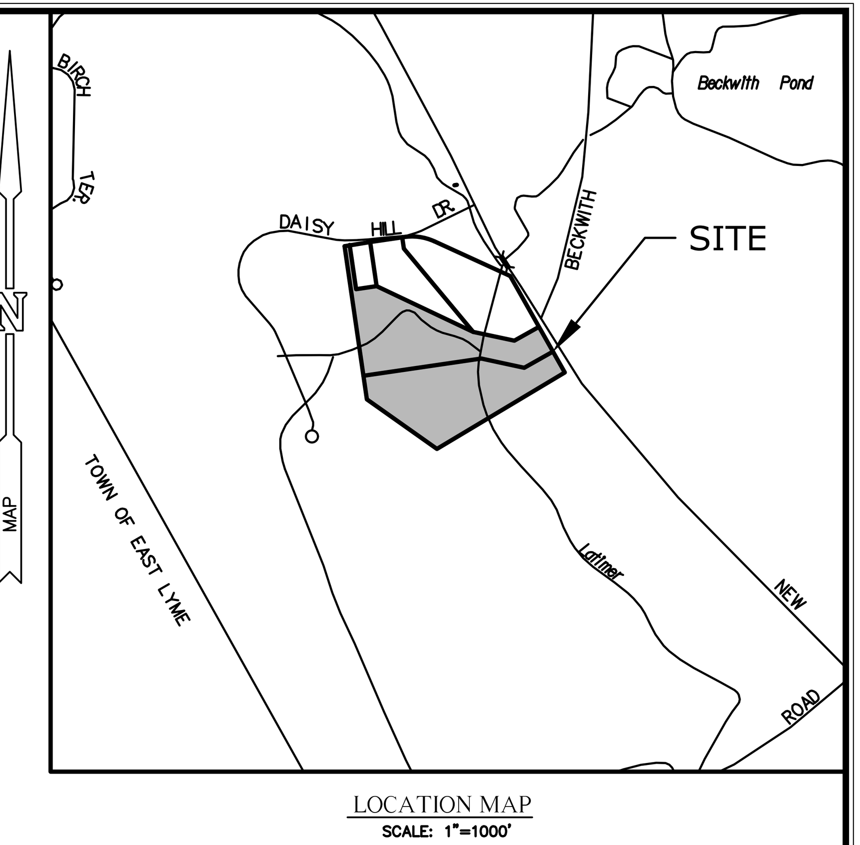

LOCATION MAP
SCALE: 1"=1000'

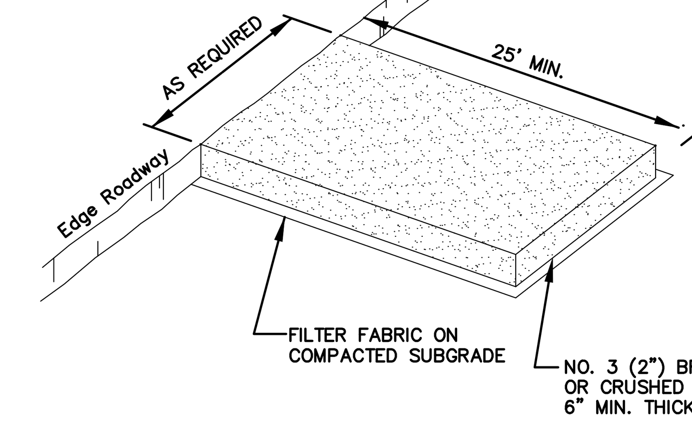

NOTE: CONSTRUCTION ENTRANCE PAD SHALL BE INSTALLED AND MAINTAINED DURING OPERATIONS WHICH PROMOTE VEHICULAR TRACKING OF MUD

CONSTRUCTION ENTRANCE PAD
N.T.S.

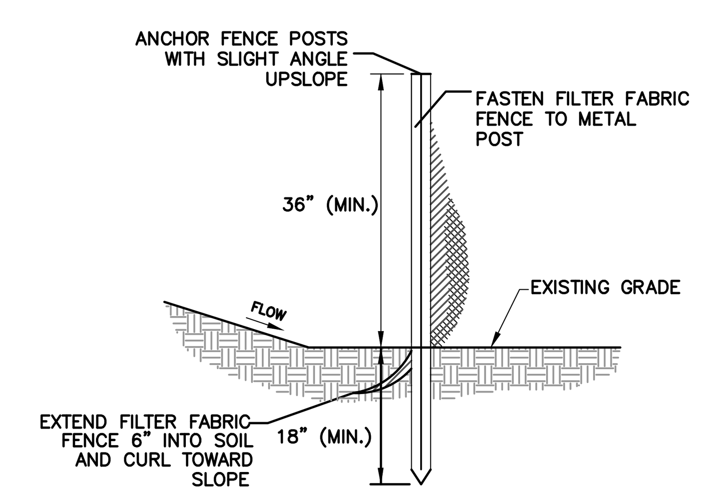

GEOTEXTILE SILT FENCE
N.T.S.

STATE OF CONNECTICUT RYAN J MCEVOY No. PEN.0025786 LICENSED PROFESSIONAL ENGINEER

REVISED: JULY 14, 2020

PLOT PLAN

FRANK CRANDALL
LOTS 3 and 4
NEW LONDON TURNPIKE (RT. 85) & DAISY HILL DRIVE
MONTVILLE, CONNECTICUT

ADS DESIGNED	ADS DRAWN	RJM CHECKED
SCALE	1"=60'	
DATE	JULY 9, 2020	

MILONE & MACBROOM
99 REALTY DRIVE
CHESHIRE, CT 06410
203.271.1773
WWW.MMINC.COM

PROJECT NO. 7251-01

SHEET NO. 1 OF 3

SYSTEM DESIGN

DESIGN BASIS: CONNECTICUT PUBLIC HEALTH CODE REGULATIONS AND TECHNICAL STANDARDS FOR SUBSURFACE SEWAGE DISPOSAL SYSTEMS REVISED JANUARY 2018.

FLOW: 5 BEDROOMS (600 GPD)
PERC RATE: 10.1–20.0 MIN/INCH
EFFECTIVE AREA REQUIRED = 900 SQ.FT.

RESTRICTIVE LAYER = NONE OBSERVED
SLOPE = 10.1–15%
RECEIVING SOIL DEPTH =>60.0
HYDRAULIC FACTOR (HF) = N/A
FLOW FACTOR (FF) = N/A
PERCOLATION FACTOR (PF) = N/A
MLSS = N/A

USE 3 ROWS – 100 LF OF 12" STANDARD STONE LEACHING TRENCHES
EFFECTIVE LEACHING AREA PROVIDED = 900 SQ.FT. (3.0 SQ.FT./L.F.)

RESERVE AREA: USE 2 ROWS OF 88 LF OF 18" CONCRETE LEACHING GALLEYS
EFFECTIVE LEACHING AREA PROVIDED = 1091.2 SQ.FT. (6.2 SQ.FT./L.F.)

SEPTIC TANK SIZING:

5 BEDROOM HOUSE = 1,250 GAL.
*NO LARGE TUB OR GARBAGE DISPOSAL IS PROPOSED

SEPTIC SYSTEM INVERT ELEVATIONS:

FOUNDATION WALL = 174.0

SEPTIC TANK INLET = 173.0
SEPTIC TANK OUTLET = 172.7

CLEANOUT DROP IN=172.6
CLEANOUT DROP OUT=161.5

D–BOX INVERT ROW 1 = 152.3
OVERFLOW ELEVATION = 152.4

ROW 1 INVERT ELEVATION = 152.2
1 BOTTOM ELEVATION = 151.7

D–BOX INVERT ROW 2 = 150.8
OVERFLOW ELEVATION = 150.9

ROW 2 INVERT ELEVATION = 150.7
ROW 2 BOTTOM ELEVATION = 150.2

D–BOX INVERT ROW 3 = 149.8

ROW 3 INVERT ELEVATION = 149.7
ROW 3 BOTTOM ELEVATION = 149.2

Test Pit: 9

00"–19" TOPSOIL
16"–62" BROWN SANDY LOAM
62"–91" SAND AND GRAVEL

MOTTLING–N/A
GROUNDWATER–N/A
LEDGE–N/A
REFUSAL–N/A

PERC: 9
DEPTH: 32"
RATE: 20.1–30.0 MIN/IN

Test Pit: 10

00"–16" TOPSOIL
16"–86" SAND AND GRAVEL

MOTTLING–N/A
GROUNDWATER–N/A
LEDGE–N/A
REFUSAL–N/A

Test Pit: 11

00"–12" TOPSOIL
12"–27" BROWN SANDY LOAM
27"–86" SAND AND GRAVEL

MOTTLING–N/A
GROUNDWATER–N/A
LEDGE–N/A
REFUSAL–N/A

PERC: 11
DEPTH: 24"
RATE: 10.1–20.0 MIN/IN

Test Pit: 12

00"–09" TOPSOIL
09"–36" BROWN SANDY LOAM
36"–94" SAND AND GRAVEL

MOTTLING–N/A
GROUNDWATER–N/A
LEDGE–N/A
REFUSAL–N/A

SANITARY CLEANOUT (DROP)

NOT TO SCALE

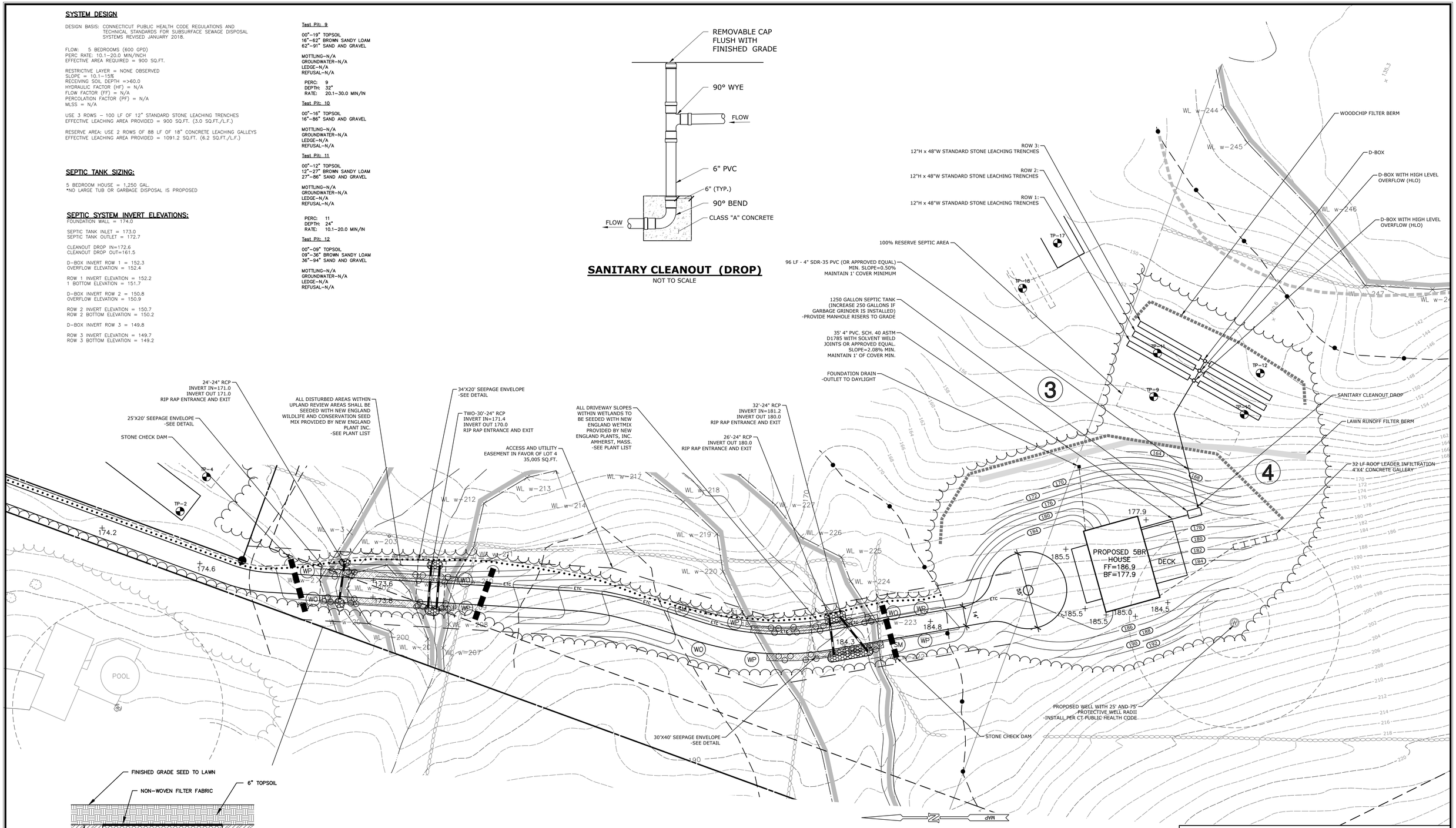

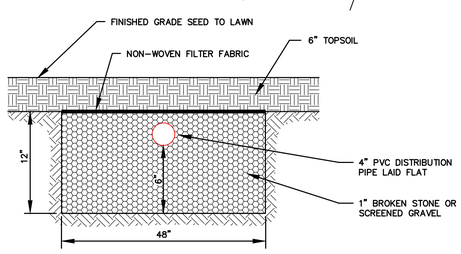

TYPICAL SECTION THRU LEACHING TRENCH

N.T.S.

PLANT LIST

SHRUBS		QTY.	KEY	BOTANICAL NAME	COMMON NAME
		17	SD	Cornus Amomum	Silky Dogwood
		17	SB	Linderra Benzoin	Spicebush
		17	CW	Ilex Verticillata	Common Winterberry
TREES	**REV.**	**QTY.**	**KEY**	**BOTANICAL NAME**	**COMMON NAME**
WO WP SM		4	WO	Acer Sacchrum	Shadblow
		6	WP	Pinus Strobus	Heritage River Birch
		2	SM	Cornus kousa	Kousa Dogwood

STATE OF CONNECTICUT
RYAN J. MOORE
No. PLS-0025788
LICENSED PROFESSIONAL ENGINEER

REVISED: JULY 14, 2020

PLOT PLAN

FRANK CRANDALL
LOTS 3 and 4
NEW LONDON TURNPIKE (RT. 85) & DAISY HILL DRIVE
MONTVILLE, CONNECTICUT

ADS	ADS	RJM	MILONE & MACBROOM	7251-01
DESIGNED	DRAWN	CHECKED		PROJECT NO.
SCALE 1"=30'				
DATE JULY 9, 2020				2 OF 3
				SHEET NO.

99 REALTY DRIVE
CHESHIRE, CT 06410
203.271.1773
WWW.MMHINC.COM

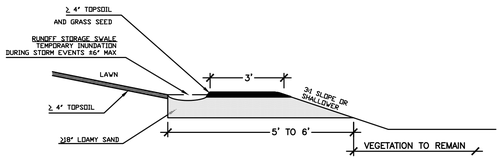

LAWN RUNOFF FILTER BERM & SWALE

N.T.S.

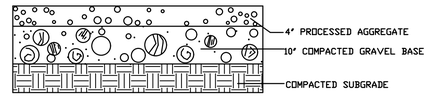

GRAVEL DRIVEWAY DETAIL

NTS

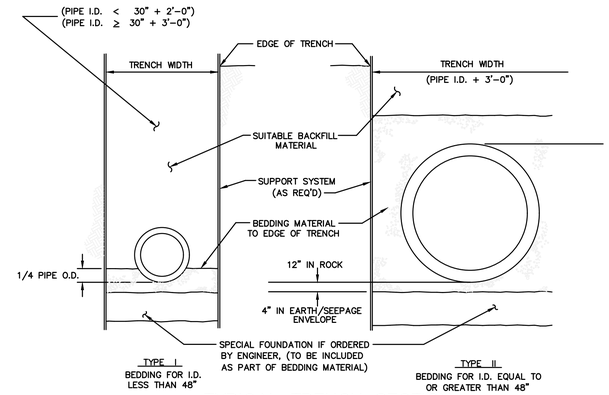

TYPICAL TRENCH SECTION

STORM DRAINS AND CULVERTS

N.T.S.

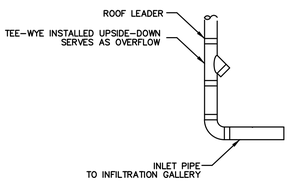

ROOF LEADER CONNECTION

N.T.S.

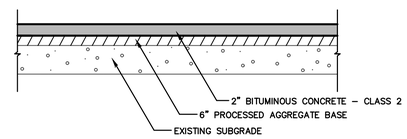

DRIVEWAY PAVEMENT DETAIL

N.T.S.

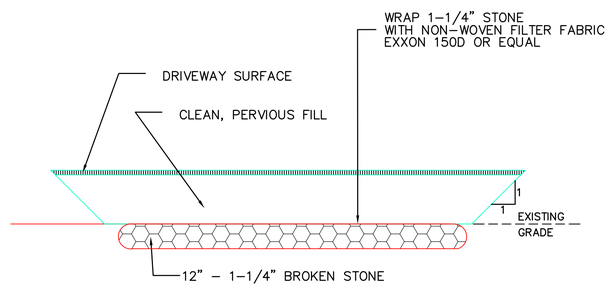

TYPICAL SEEPAGE ENVELOPE

N.T.S.

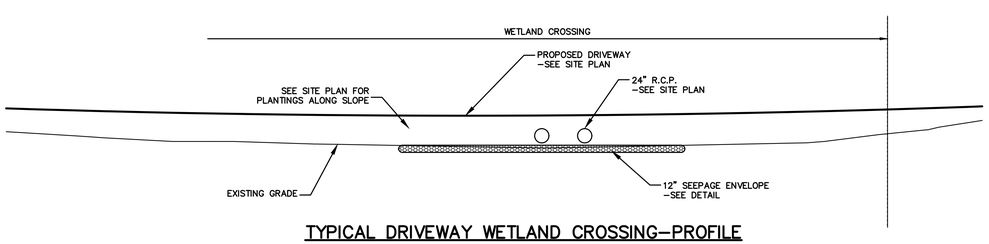

TYPICAL DRIVEWAY WETLAND CROSSING–PROFILE

N.T.S.

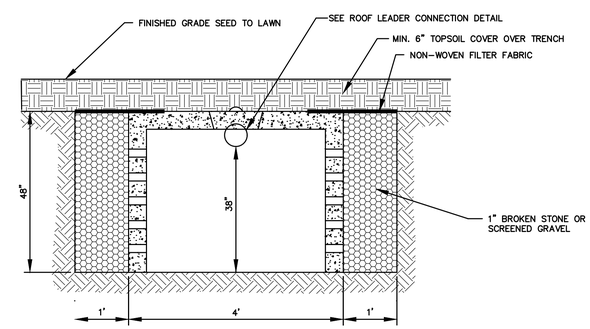

ROOF LEADER INFILTRATION GALLERY

N.T.S.

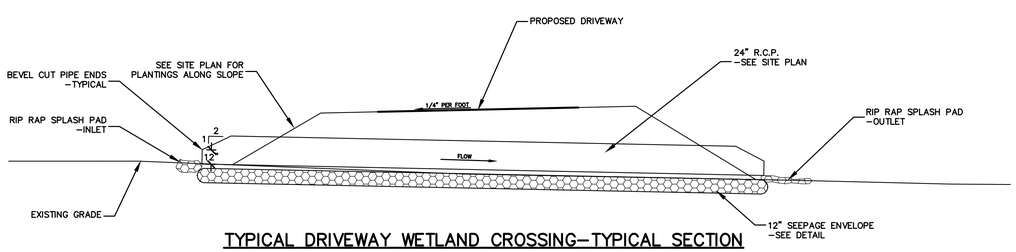

TYPICAL DRIVEWAY WETLAND CROSSING–TYPICAL SECTION

N.T.S.

STATE OF CONNECTICUT
RYAN J MCEVOY
No. PER.0025788
LICENSED
PROFESSIONAL ENGINEER

REVISED: JULY 14, 2020

PLOT PLAN

FRANK CRANDALL
LOTS 3 and 4
NEW LONDON TURNPIKE (RT. 85) & DAISY HILL DRIVE
MONTVILLE, CONNECTICUT

ADS	ADS	RJM	MILONE & MACBROOM	7251-01
DESIGNED	DRAWN	CHECKED		PROJECT NO.
SCALE NOT TO SCALE				3 OF 3
DATE JULY 9, 2020				SHEET NO.

99 REALTY DRIVE
CHESHIRE, CT 06410
203.271.1773
WWW.MMINC.COM