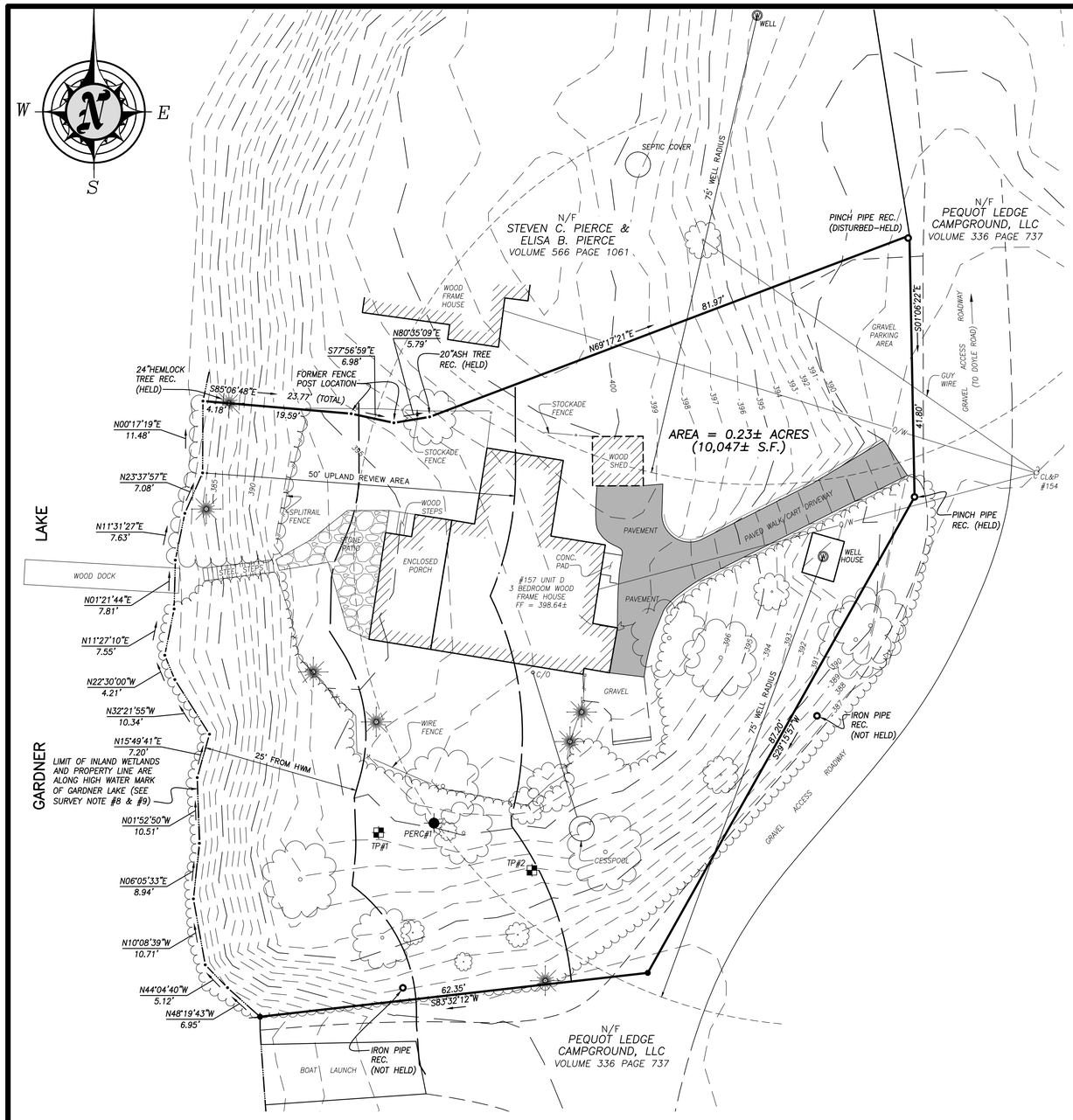

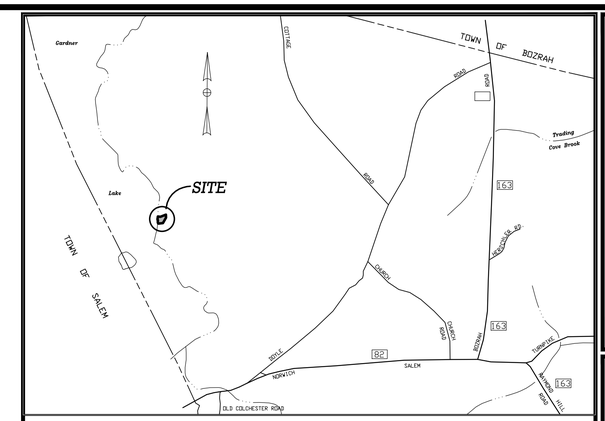

LOCATION MAP

SCALE: 1" = 1000'

SURVEY NOTES

1. THIS SURVEY HAS BEEN PREPARED PURSUANT TO THE REGULATIONS OF CONNECTICUT STATE AGENCIES SECTIONS 20–300b–1 THROUGH 20–300b–20 AND THE "STANDARDS FOR SURVEYS AND MAPS IN THE STATE OF CONNECTICUT" AS ADOPTED BY THE CONNECTICUT ASSOCIATION OF LAND SURVEYORS, INC. ON SEPTEMBER 26, 1996. IT IS A PROPERTY SURVEY ("DEPENDANT SURVEY"). TOPOGRAPHIC SURVEY AND IMPROVEMENT LOCATION SURVEY CONFORMING TO HORIZONTAL CLASS A–2 AND TOPOGRAPHIC T–2 STANDARDS OF ACCURACY AS DEFINED IN THE ABOVE REGULATIONS.

2. FOR RECORD TITLE TO THE SUBJECT PARCEL, REFERENCE IS MADE TO THE FOLLOWING DOCUMENTS RECORDED IN THE TOWN OF MONTVILLE LAND RECORDS:
   a. AN AFFIDAVIT RECORDED OCTOBER 10, 1997 IN VOLUME 302 PAGE 702.
   b. A QUIT CLAIM DEED FROM EDWARD E. RAITZ AND BETTY K. RAITZ TO EDWARD E. RAITZ AND BETTY K. RAITZ, TRUSTEES RECORDED APRIL 21, 1992 IN VOLUME 241 PAGE 275.

3. FOR ROOT TITLE TO THE SUBJECT PARCEL, REFERENCE IS MADE TO A WARRANTY DEED FROM ANNE C. ALQUIST TO EDWARD E. RAITZ AND BETTY K. RAITZ RECORDED SEPTEMBER 9, 1970 IN VOLUME 109 PAGE 185 OF THE TOWN OF MONTVILLE LAND RECORDS.

4. THIS SURVEY WAS PREPARED WITHOUT PHYSICAL ACCESS TO THE OFFICIAL TOWN OF MONTVILLE LAND RECORDS DUE TO THE GOVERNMENT–MANDATED QUARANTINE IN PLACE DURING THE TIME OF THIS SURVEY. LAND RECORDS RESEARCH WAS COMPLETED USING THE ONLINE SERVICE OFFERED BY THE TOWN OF MONTVILLE TOWN CLERK THROUGH https://recordhub.cottsystems.com/. THIS SURVEY IS THEREFORE SUBJECT TO SUCH CHANGE AS A THOROUGH REVIEW OF THE OFFICIAL TOWN OF MONTVILLE LAND RECORDS MAY DISCLOSE.

5. REFERENCE IS MADE TO A PLAN TITLED: "PLOT PLAN PORTION OF LAND OF ANNE C. ALQUIST MONTVILLE, CONN. SCALE 1" = 20' DATE AUG. 21, 1970 DWG. NO. 086–70–201" BY EDWARD J. BAZZELL.

6. BEARINGS REFER TO 1983 NORTH AMERICAN DATUM (NAD83) AND ELEVATIONS AND CONTOURS REFER TO 1988 NORTH AMERICAN VERTICAL DATUM (NAVD88) BASED ON GPS OBSERVATIONS TAKEN JUNE 20, 2020.

7. UNDERGROUND UTILITY, STRUCTURE, AND FACILITY LOCATIONS DEPICTED AND NOTED HEREON HAVE BEEN COMPILED, IN PART, FROM RECORD MAPPING SUPPLIED BY THE RESPECTIVE UTILITY COMPANIES OR GOVERNMENTAL AGENCIES, FROM PAROL TESTIMONY AND FROM OTHER SOURCES. THESE LOCATIONS MUST BE CONSIDERED AS APPROXIMATE IN NATURE, ADDITIONALLY, OTHER SUCH FEATURES MAY EXIST ON THE SITE, THE EXISTENCE OF WHICH ARE UNKNOWN TO BOUNDARIES, LLC. THE SIZE, LOCATION AND EXISTENCE OF ALL SUCH FEATURES MUST BE FIELD DETERMINED AND VERIFIED BY THE APPROPRIATE AUTHORITIES PRIOR TO CONSTRUCTION. CALL BEFORE YOU DIG 1–800–922–4455

8. THE BEARINGS AND DISTANCES ALONG THE EDGE OF GARDNER LAKE REPRESENT THE PRINCIPAL COURSES ALONG THE OBSERVED HIGH WATER MARK AND THE PROPERTY LINE OF THE SUBJECT PARCEL.

9. THE SUBJECT PARCEL WAS REVIEWED BY JOSEPH THEROUX, C.S.S. AND DETERMINED THAT THE EDGE OF INLAND WETLANDS IS IN THE SAME LOCATION AS THE HIGH WATER MARK ALONG THE EDGE OF GARDNER LAKE AS NOTED HEREON.

10. THIS PROPERTY IS LOCATED IN A FLOOD ZONE X (AREAS OF MINIMAL FLOODING) AS SHOWN ON "FIRM FLOOD INSURANCE RATE MAP NEW LONDON COUNTY, CONNECTICUT ALL JURISDICTIONS PANEL 188 OF 554" MAP NUMBER 09011C0188G EFFECTIVE DATE JULY 18, 2011 PREPARED BY THE FEDERAL EMERGENCY MANAGEMENT AGENCY.

LEGEND & ABBREVIATIONS

	UTILITY POLE	SAN	SANITARY
CL&P	CONNECTICUT LIGHT & POWER	INV	INVERT
SNET	SOUTHERN NEW ENGLAND TELEPHONE	S	SLOPE
±	MORE OR LESS	N/F	NOW OR FORMERLY
REC	RECOVERED		PROPOSED TREE LINE
SF	SQUARE FEET	—108—	EXISTING CONTOUR
	REBAR OR IRON PIN RECOVERED	108	PROPOSED CONTOUR
•	ANGLE POINT	109.0 x	PROPOSED SPOT ELEVATION
RBR	REBAR	CONC	CONCRETE
IP	IRON PIPE	SCHED	SCHEDULE
DH	DRILL HOLE	—O/W—	OVERHEAD WIRE
●	POINT TO BE SET	D–BOX	DISTRIBUTION BOX
	MONUMENT	FF	FINISHED FLOOR
TYP	TYPICAL	PVC	POLYVINYL CHLORIDE
MIN	MINIMUM		DECIDUOUS TREE
	DEEP TEST PIT		CONIFEROUS TREE
	PERCOLATION TEST		
W	WELL		

GRAPHIC SCALE

10 0 5 10 20 40

(IN FEET)
1 inch = 10 ft.

STATE OF CONNECTICUT
STEVEN RICHARD MARIEN
No. 70125
LICENSED
LAND SURVEYOR

"TO MY KNOWLEDGE AND BELIEF THIS MAP IS SUBSTANTIALLY CORRECT AS NOTED HEREON."

STEVEN R. MARIEN, LS, CFedS	LICENSE NO.	DATE
	70125	07/06/2020

SEE SHEET 2 OF 2 FOR SANITARY REPAIR PLAN

74 CRANBERRY POND ROAD
NORWICH, CONNECTICUT 06360
TELEPHONE (860) 886-9202
MOBILE (860) 885-4424

STAR SURVEYING, LLC

REVISION	DESCRIPTION	DATE

REVISIONS

BOUNDARY AND TOPOGRAPHIC SURVEY PLAN

PREPARED FOR
DONALD RAITZ

PROPERTY OF
BETTY K. RAITZ, TRUSTEE
LOCATED AT
157 DOYLE ROAD, UNIT D, MONTVILLE (OAKDALE), CONNECTICUT

DATE: JULY 6, 2020
SCALE: 1 inch = 10 feet
DRAWN BY: SRM/RJS
FILE NAME: RAITZ_SMVEPRL_A272.DWG

SHEET NUMBER 1 / 2

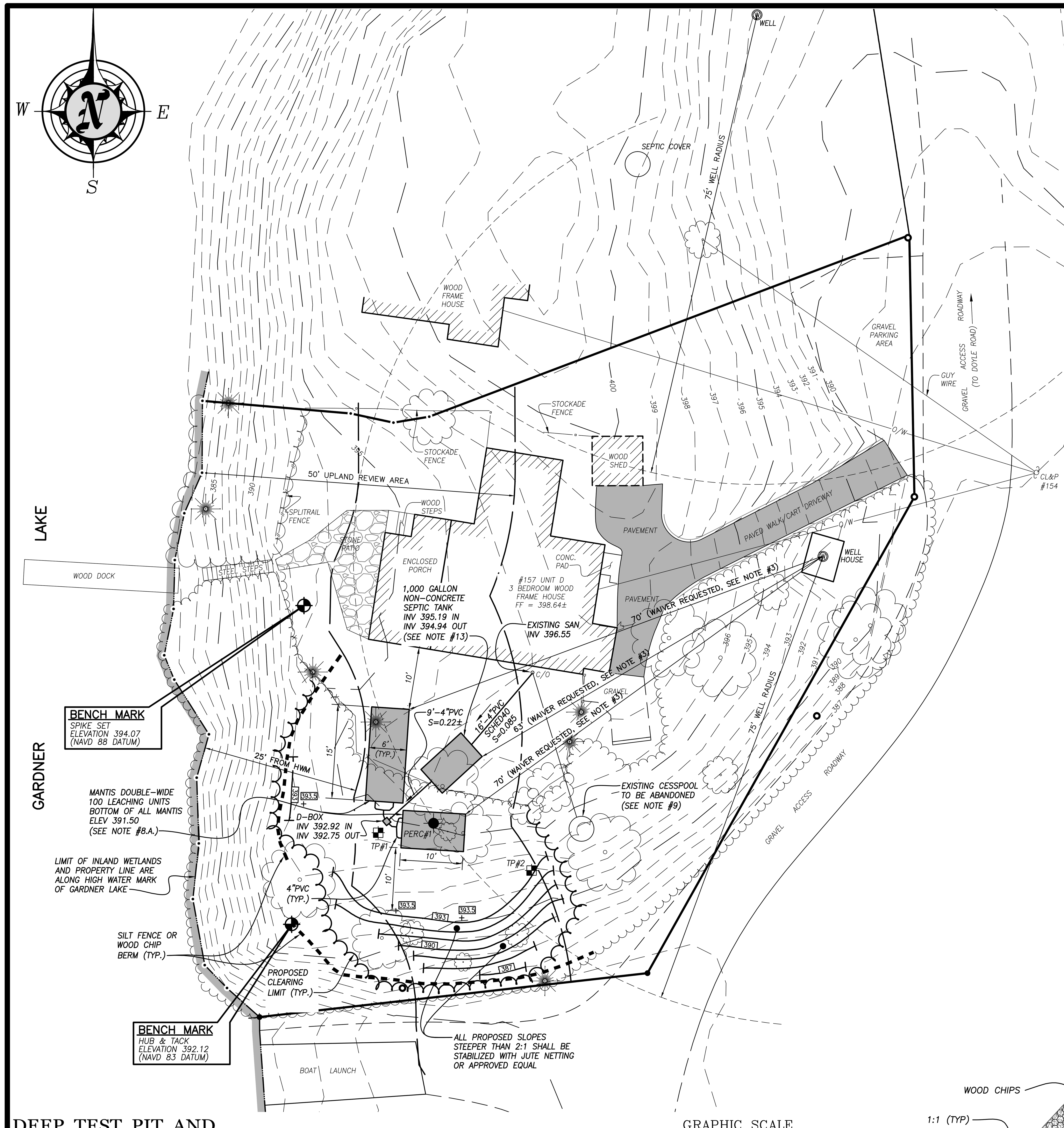

SANITARY NOTES

1. THIS SEPTIC SYSTEM REPAIR INSTALLATION INCLUDING ALL MATERIALS (PIPING, SEPTIC TANK, MANTIS UNITS, SAND, FILL, ETC.) USED FOR THIS SEPTIC SYSTEM SHALL CONFORM TO THE CURRENT EDITION/REVISION OF THE "TECHNICAL STANDARDS FOR SUBSURFACE SEWAGE DISPOSAL SYSTEMS" REVISED JANUARY 1, 2018 OF THE CONNECTICUT PUBLIC HEALTH CODE BY THE STATE OF CONNECTICUT DEPARTMENT OF PUBLIC HEALTH.
2. THE PROPOSED SEWER PIPE FROM THE BUILDING TO THE SEPTIC TANK SHALL BE SCHEDULE 40 PVC ASTM D 1785/ASTM D 2665 OR APPROVED EQUAL AND INDICATED IN TABLE NO. 2 OF "TECHNICAL STANDARDS FOR SUBSURFACE SEWAGE DISPOSAL SYSTEMS". ALL SEWER PIPE FOR THIS SEPTIC SYSTEM REPAIR SHALL BE PVC ASTM D 3034, SDR 35 WITH RUBBER COMPRESSION GASKET OR BELL AND SPIGOT WITH NO GASKETS OR APPROVED EQUAL AND LISTED IN TABLE NO. 2-A OF THE "TECHNICAL STANDARDS FOR SUBSURFACE SEWAGE DISPOSAL SYSTEMS". IF THE CHANGE IN DIRECTION OF THE BUILDING SEWER LINE IS >45 DEGREES, CLEANOUTS TO GRADE WILL BE REQUIRED.
3. THERE ARE NO WELLS (POTABLE, OPEN LOOP GEOTHERMAL, IRRIGATION OR SPRING) WITHIN 75' OF THE PROPOSED SEPTIC SYSTEM REPAIR EXCEPT FOR THE OWNER'S EXISTING WELL. A WAIVER IS REQUESTED TO REDUCE THE SEPARATION DISTANCE FROM THE EXISTING WELL TO 70' FOR THE NEAREST PROPOSED MANTIS UNITS AND 63' TO THE PROPOSED SEPTIC TANK IN LIEU OF THE 75' MINIMUM REQUIRED PER THE CONNECTICUT PUBLIC HEALTH CODE.
4. THERE SHALL BE NO STUMPS OR BOULDERS BURIED WITHIN 50' DOWN GRADIENT OF THE SEPTIC SYSTEM REPAIR. SHOULD ANY SIGNIFICANT VARIATIONS FROM THE TEST PIT DATA BE ENCOUNTERED DURING EXCAVATIONS (LEDGE, GROUNDWATER, MOTTLING, SOIL TYPE, UNSUITABLE MATERIAL, ETC.), THE UNCAS HEALTH DISTRICT SHALL BE NOTIFIED PRIOR TO INSTALLATION OF THE SEPTIC SYSTEM.
5. ALL EXISTING UTILITIES ARE APPROXIMATE ONLY. THE CONTRACTOR SHALL VERIFY ALL UTILITY LOCATIONS AND ELEVATIONS PRIOR TO ANY CONSTRUCTION. CONTRACTOR SHALL CONTACT "CALL-BEFORE-YOU-DIG" AT 1-800-922-4455 AT LEAST 48 HOURS PRIOR TO ANY EXCAVATION.
6. NO DEVIATION FROM THE APPROVED DESIGN PLAN SHALL BE ALLOWED WITHOUT PRIOR WRITTEN APPROVAL FROM THE DESIGN ENGINEER, ROBERT J. SCHUCH, P.E. AND THE UNCAS HEALTH DISTRICT.
7. THE PROPOSED SEPTIC SYSTEM REPAIR SHALL BE STAKED OUT BY A LICENSED LAND SURVEYOR PRIOR TO CONSTRUCTION.
8. SITE PREPARATION PROCEDURE FOR THE INSTALLATION OF THE PROPOSED SEPTIC SYSTEM REPAIR:
   - A. CONTACT THE UNCAS HEALTH DISTRICT AND COORDINATE CONSTRUCTION INSPECTIONS AS REQUIRED. INSTALL ALL EROSION CONTROL MEASURES. PERFORM A DEEP TEST PIT IN THE PROPOSED SEPTIC SYSTEM REPAIR AREA WITH UNCAS HEALTH DISTRICT TO VERIFY THERE IS NO LEDGE WITHIN 4' OF THE BOTTOM OF THE PROPOSED MANTIS UNITS (ELEVATION 387.5). IF LEDGE IS ENCOUNTERED ABOVE THAT ELEVATION, CONTACT THE ENGINEER TO REDESIGN AS REQUIRED.
   - B. REMOVE ALL TREES, INCLUDING ROOT SYSTEMS THAT ARE LOCATED WITHIN THE PROPOSED SEPTIC SYSTEM REPAIR AREA. STRIP ALL TOPSOIL, VEGETATION, AND ORGANIC MATERIAL IN THE AREA OF THE PROPOSED MANTIS LEACHING UNITS. DISPOSE OF AT AN APPROVED LOCATION OR STOCKPILE AT AN APPROVED LOCATION FOR REUSE FOR COVER MATERIAL.
   - C. EXCAVATE SYSTEM AREA TO PREPARE FOR 84" WIDE SAND PLACEMENT TO BE SURROUNDING MANTIS UNITS.
   - D. PLACE AND COMPACT APPROVED SAND BELOW THE MANTIS UNIT LOCATIONS (AS REQUIRED) MEETING SPECIFICATIONS INDICATED ELJEN MANTIS SAND SPECIFICATION TABLE/DETAIL). INSTALL MANTIS UNITS IN ACCORDANCE WITH MANUFACTURER'S INSTALLATION REQUIREMENTS (SEE https://eljen.com/mantis-CT) AND PLACE AND COMPACT APPROVED SAND AROUND AND ON MANTIS SIDES (AS REQUIRED) UP TO AT LEAST 1" ABOVE THE MANTIS UNITS.
   - E. COVER SYSTEM WITH APPROVED BACKFILL AND TOPSOIL A MINIMUM OF 6" IN LAWN AREAS, GRADE TO PREVENT PONDING AND SEED WITH GRASS TO STABILIZE. THE FINISHED GRADE 10' FROM ANY PART OF THE PROPOSED MANTIS LEACHING SYSTEM SHALL BE AT LEAST THE SAME ELEVATION AS THE TOP OF THE RESPECTIVE MANTIS UNIT. PROVIDE ADEQUATE MEASURES TO PREVENT ANY VEHICULAR TRAFFIC, BACKHOE, TRUCKS, ETC. FROM TRAVELING OVER NEW SEPTIC SYSTEM AS IT IS NOT CERTIFIED BY THE MANUFACTURER FOR HEAVY (H-20) LOADING. INSTALL VENT PIPING, AS REQUIRED DEPENDING ON DEPTH OF MANTIS UNITS.
   - F. CLEANOUT MANHOLES AT THE INLET BAFFLE AND AT THE OUTLET FILTER OF THE SEPTIC TANK OR ASSOCIATED RISERS AT THESE LOCATIONS, IF REQUIRED, SHALL BE LOCATED AT A DEPTH NOT GREATER THAN 12" BELOW FINAL GRADE.
9. THE EXISTING CESSPOOL LOCATION IS APPROXIMATE. THE CESSPOOL SHALL BE PUMPED OUT, FILLED WITH SAND AND ABANDONED IN PLACE, UNLESS DIRECTED OTHERWISE BY THE UNCAS HEALTH DISTRICT.
10. THE PROPOSED SEPTIC SYSTEM SHALL BE STAKED OUT BY A LICENSED LAND SURVEYOR PRIOR TO CONSTRUCTION.
11. THE OWNER AND HIS CONTRACTOR ARE RESPONSIBLE FOR INSURING THE SEPTIC SYSTEM REPAIR INSTALLATION COMPLIES WITH SEPTIC REQUIREMENTS SET FORTH BY STATE AND LOCAL REGULATIONS.
12. THE LICENSED INSTALLER WHO IS RESPONSIBLE FOR THE INSTALLATION OF THE SEPTIC SYSTEM SHALL BE ON SITE DURING THE CONSTRUCTION OF THE SEPTIC SYSTEM.
13. THE PROPOSED SEPTIC TANK SHALL BE NON-CONCRETE SEPTIC TANK APPROVED BY THE STATE OF CONNECTICUT DEPARTMENT OF PUBLIC HEALTH AND LISTED IN APPENDIX D OF THE PUBLIC HEALTH CODE. THE TANK SET LEVEL ON A MINIMUM OF 6" OF PROCESSED AGGREGATE OR BROKEN STONE BASED ON COMPACTED SUBGRADE. ALL COMPACTION SHALL BE 95% MODIFIED PROCTOR DENSITY. BACKFILL AROUND SEPTIC TANK SHALL BE PLACED AND COMPACTED IN 6" LIFTS TO 95% MODIFIED PROCTOR DENSITY. FILL TANK WITH WATER TO DISCHARGE OUTLET PIPE LEVEL AFTER ACCEPTANCE.

NARRATIVE

THIS PROJECT INVOLVES THE SANITARY REPAIR FOR AN EXISTING 3 BEDROOM DWELLING ABUTTING GARDNERS LAKE. THE PROPOSED IMPROVEMENTS INCLUDE TREE REMOVAL IN THE AREA OF THE PROPOSED SANITARY REPAIR SYSTEM, INSTALLATION OF A 1,000 GALLON SEPTIC TANK AND 25' OF MANTIS DOUBLE-WIDE 100 UNITS IN ACCORDANCE WITH THE STATE OF CONNECTICUT PUBLIC HEALTH CODE, AND STABILIZING ALL DISTURBED AREAS.

DUE TO THE SIZE OF THE EXISTING LOT, DWELLING AND WELL, THE PROPOSED SEPTIC SYSTEM WILL BE LOCATED WITHIN 50' OF THE EDGE OF THE LAKE, BUT NOT LESS THAN 25'. A WAIVER FROM THE STATE OF CONNECTICUT DEPARTMENT OF PUBLIC HEALTH IS REQUIRED TO INSTALL THE SEPTIC SYSTEM LESS THAN THE MINIMUM 75' FROM THE OWNER'S EXISTING WELL (WAIVER REQUESTED TO ALL 70' FROM MANTIS UNITS AND 63' FROM THE SEPTIC TANK).

THE APPARENT LIMIT OF REGULATED INLAND WETLANDS IS THE EDGE OF THE LAKE.

THE TOPOGRAPHY OF THE PROPERTY VARIES FROM RELATIVELY FLAT UP ON A PLATEAU WHERE THE BUILDING AND PROPOSED SEPTIC AREA IS WITH 33% SLOPES TO THE SOUTH AND 90% TO THE WEST TOWARD THE LAKE.

THE SOILS IN THE DEVELOPMENT AREA ACCORDING TO THE NRCS WEB SOIL SURVEY GENERALLY CONSIST OF HINCKLEY LOAMY SAND, 3-15% SLOPES.

EROSION CONTROLS THAT WILL BE IMPLEMENTED TO MINIMIZE SOIL EROSION AND CONTROL SEDIMENT INCLUDE:
- SEDIMENT FENCE OR WOOD CHIP BERM DOWNGRADIENT OF ALL CONSTRUCTION AREAS.
- JUTE NETTING OR APPROVED EQUAL SHALL BE USED TO STABILZE ALL SLOPES GREATER THAN 2:1.

CONSTRUCTION SEQUENCE

1. SECURE ALL REQUIRED LOCAL, STATE AND FEDERAL PERMITS.
2. CLEAR TREES IN THE AREA OF THE PROPOSED SEPTIC SYSTEM REPAIR. INSTALL AND MAINTAIN SEDIMENT FENCE OR WOOD CHIP BERM DOWNGRADIENT OF CONSTRUCTION AREA.
3. CLEAR AND REMOVE ALL VEGETATION FROM PROPOSED SEPTIC SYSTEM REPAIR AREA. DISPOSE OF THIS MATERIAL AT AN APPROVED LOCATION.
4. BEGIN EXCAVATION FOR SYSTEM INSTALLATION. INSTALL SEPTIC SYSTEM. STABILIZE ALL DISTURBED AREAS. ALL SLOPES EXCEEDING 2:1 SHALL BE STABILZED WITH JUTE NETTING OR APPROVED EQUAL. A RETAINING WALL MAY BE UTILIZED IN LIEU OF FILLING THE EXISTING STEEP SLOPE.
5. PUMP OUT EXISTING CESSPOOL AND ABANDON IN PLACE.
6. STABILIZE ALL DISTURBED AREAS WITH 4" MINIMUM OF TOPSOIL, SEED WITH GRASS AND MULCH.
7. AFTER ALL AREAS HAVE BEEN PERMANENTLY STABILIZED, REMOVE EROSION CONTROLS.

EROSION CONTROL NOTES

1. ALL UTILITIES ARE APPROXIMATE. CONTRACTOR TO VERIFY ALL UTILITIES PRIOR TO CONSTRUCTION. CONTACT "CALL-BEFORE-YOU-DIG" AT 1-800-922-4455 AT LEAST 72 HOURS PRIOR TO ANY EXCAVATION.
2. THE RESPONSIBILITY OF THE INSTALLATION AND MAINTENANCE OF ALL EROSION CONTROL MEASURES WILL BE THE SEPTIC INSTALLER OR THE EXCAVATION CONTRACTOR (UNKNOWN AT THIS TIME).
3. THE "2002 CONNECTICUT GUIDELINES FOR SOIL EROSION AND SEDIMENT CONTROL" BY THE CONNECTICUT COUNCIL ON SOIL AND WATER CONSERVATION IN COOPERATION WITH THE CONNECTICUT DEPARTMENT OF ENVIRONMENTAL PROTECTION, DEP BULLETIN 34, SHALL BE USED FOR INSTALLING AND MAINTAINING ALL EROSION CONTROL MEASURES. THE CONTRACTOR SHALL INSTALL ADDITIONAL MEASURES AS NECESSARY IF DIRECTED BY THE ENGINEER OR THE TOWN OF MONTVILLE STAFF.
4. SEEDING FOR PERMANENT STABILIZATION SHALL BE DONE BETWEEN APRIL 15 THROUGH JUNE 15 OR BETWEEN AUGUST 15 THROUGH SEPTEMBER 15. A CONSERVATION MIX OR EROSION CONTROL/RESTORATION MIX SHALL BE USED. IF SEEDING CANNOT BE DONE WITHIN THESE TIMES, APPLY TEMPORARY MULCH UNTIL NEXT SEEDING TIME. SEED MIXTURE SHALL BE AS FOLLOWS:

ALL 2:1 SLOPE AREAS		
CROWN VETCH	15 LBS/ACRE	OR 0.35 LBS/1,000 SF
PERENNIAL RYEGRASS	10 LBS/ACRE	OR 0.25 LBS/1,000 SF
ALL OTHER GRASSED AREAS		
CREEPING RED FESCUE	20 LBS/ACRE	OR 0.45 LBS/1,000 SF
REDTOP	2 LBS/ACRE	OR 0.05 LBS/1,000 SF
CROWN VETCH	15 LBS/ACRE	OR 0.35 LBS/1,000 SF

5. MULCH SHALL BE A GOOD QUALITY HAY OR STRAW AND SHALL BE APPLIED AT A RATE OF 2 BALES/100 SF.
6. ALL EROSION CONTROL MEASURES SHALL BE INSPECTED WITHIN 24 HOURS AFTER RAIN EVENTS AND REPAIRED OR REPLACED AS NECESSARY TO INSURE COMPLIANCE WITH THE APPROVED SOIL EROSION AND SEDIMENT CONTROL PLAN.

SANITARY REPAIR DESIGN CRITERIA

EXISTING 3 BEDROOM HOUSE
DESIGN PERCOLATION RATE: LESS THAN 10.1 MINUTES/INCH
LEACHING AREA REQUIRED = 495 SF EFFECTIVE
DESIGN: PROPOSED 1,000-GALLON NON-CONCRETE SEPTIC TANK WITH 1 ROW OF 25' (15' AND 10' SECTIONS) OF MANTIS DOUBLE-WIDE 100 LEACHING UNITS WITH APPROVED SAND MEETING MANUFACTURER'S SPECIFICATIONS SURROUNDING ALL SIDES.
LEACHING AREA PROVIDED: 25' x 20.0 SF/LF = 500 SF EFFECTIVE
100% RESERVE AREA NOT REQUIRED FOR SANITARY REPAIR PER B100a CRITERIA

MINIMUM LEACHING SYSTEM SPREAD CALCULATION

MLSS NOT REQUIRED SINCE NO RESTRICTIVE LAYER WITHIN 60" DEPTH.

ELJEN MANTIS SAND SPECIFICATION TABLE

THE ELJEN MANTIS SAND FOR THIS SEPTIC SYSTEM SHALL MEET THE FOLLOWING SPECIFICATIONS:

SIEVE SIZE	% PASSING (WET)
0.375"	100
# 4	95 - 100
# 8	80 - 100
# 16	50 - 85
# 30	25 - 60
# 50	5 - 30
# 100	< 10
# 200	< 5

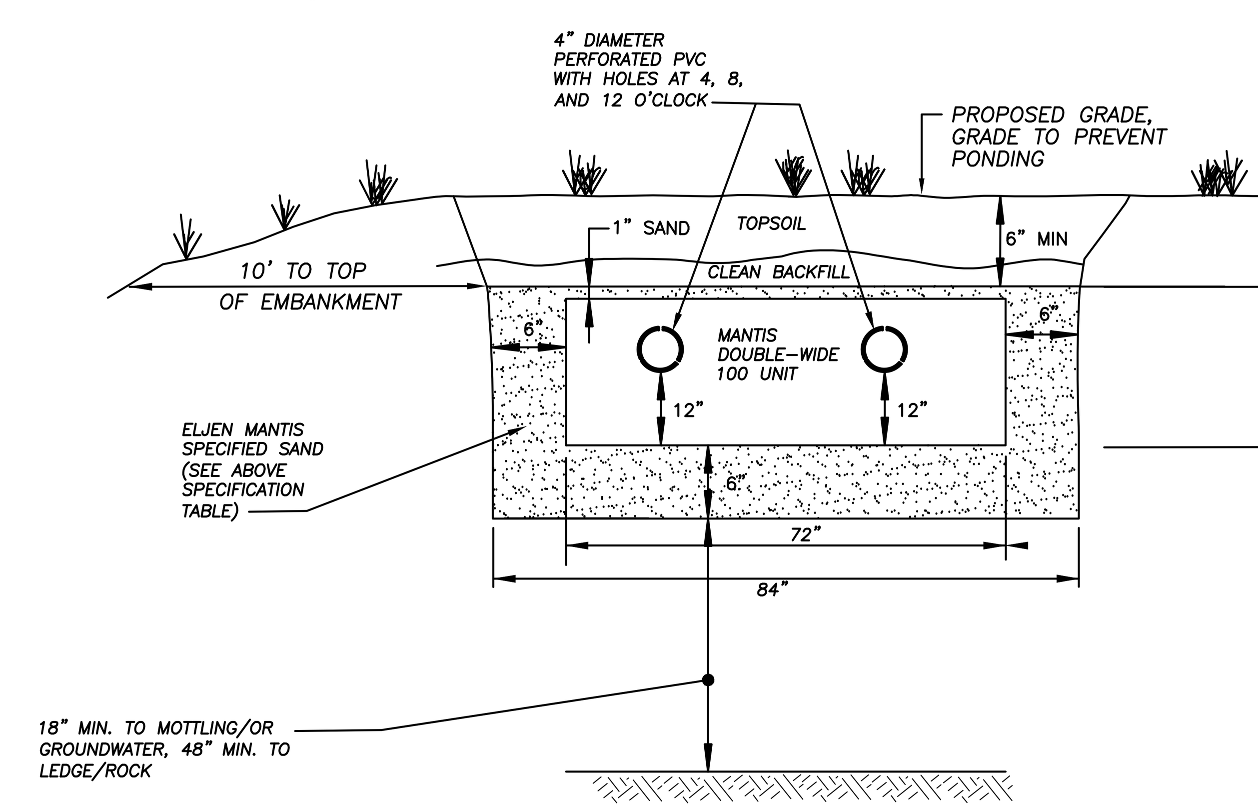

NOTE: VENTING REQUIRED WHEN MORE THAN 18" OF COVER AS MEASURED FROM THE TOP OF THE UNIT TO FINISHED GRADE

MANTIS DOUBLE-WIDE 100 UNIT CROSS SECTION

NOT TO SCALE

DEEP TEST PIT AND PERCOLATION TEST RESULTS

DEEP TEST PITS WERE WITNESSED AND PERCOLATION TEST WAS PERFORMED BY CHRISTOPHER MADDEN OF THE UNCAS HEALTH DISTRICT ON 6-24-20.

TP #1
0"-12" TOPSOIL W/ORGANICS
12"-48" TAN MEDIUM SAND W/COBBLES
48"-72" FINE SAND
NO MOTTLING, NO GROUNDWATER, ROOTS TO 36", RESTRICTIVE LAYER @ 72"

TP#2
0"-12" TOPSOIL W/ORGANICS
12"-41" TAN MEDIUM SAND W/COBBLES
41"-72" FINE SAND
NO MOTTLING, NO GROUNDWATER, ROOTS TO 33", RESTRICTIVE LAYER @ 72"

P-1
PRESOAK @ 10:18
TOTAL DEPTH = 30"

TIME.	READING
11:03	18"
11:06	20.5"
11:09	22"
11:12	23"
11:15	24.5"
11:18	25.5"
11:21	26.5"
11:23	27.5"
11:26	29"
11:29	DRY

PERCOLATION RATE @ 30" DEPTH = 2-3 MINUTES/INCH

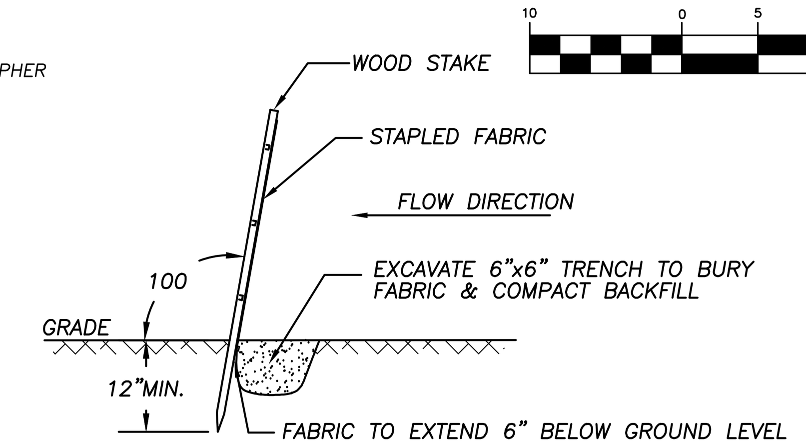

SEDIMENT FENCE DETAIL

NOT TO SCALE

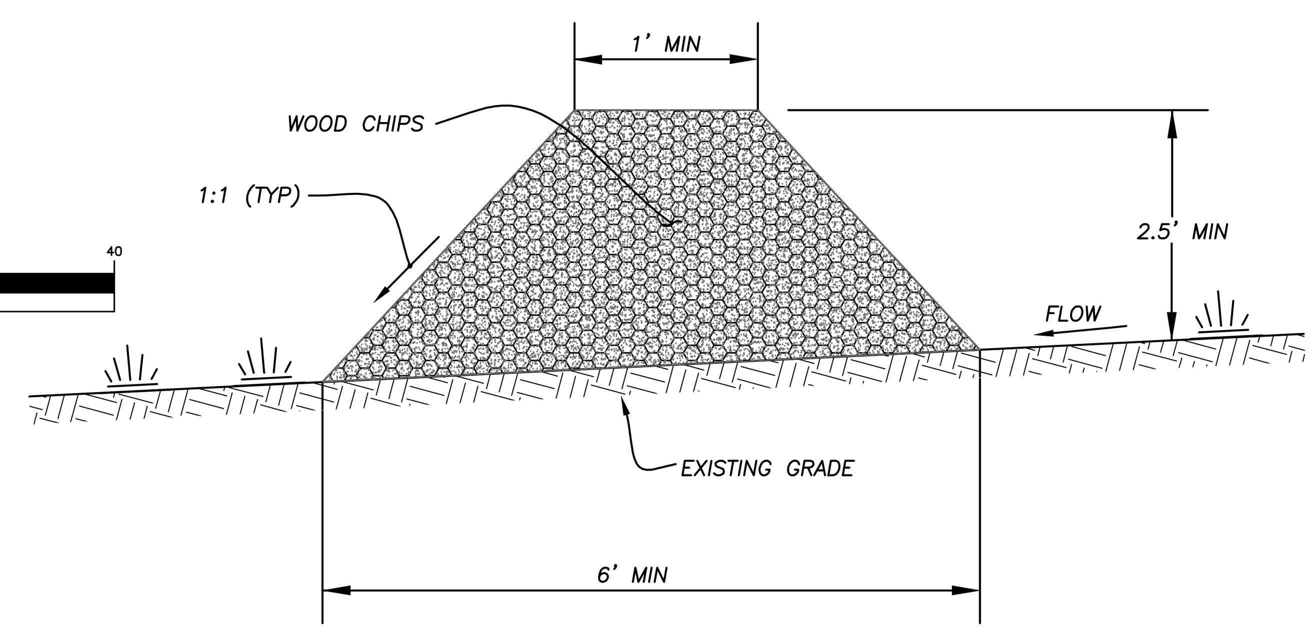

WOOD CHIP BARRIER

NOT TO SCALE

STATE OF CONNECTICUT STEVEN RICHARD MARIEN No. 70125 LICENSED LAND SURVEYOR

"TO MY KNOWLEDGE AND BELIEF THIS MAP IS SUBSTANTIALLY CORRECT AS NOTED HEREON."

STEVEN R. MARIEN, LS, CFedS	LICENSE NO.	DATE
	70125	07/06/2020

STATE OF CONNECTICUT ROBERT J. SCHUCH No. 13054 LICENSED PROFESSIONAL ENGINEER

ROBERT J. SCHUCH, P.E., CPSWQ	LICENSE NO.	DATE
	13054	07/06/2020

SEE SHEET 1 OF 2 FOR LEGEND AND LOCATION MAP

STAR SURVEYING, LLC
74 CRANBERRY POND ROAD
NORWICH, CONNECTICUT 06360
TELEPHONE (860) 886-7902
MOBILE (860) 885-4424

REVISIONS

REVISION	DESCRIPTION	DATE

DATE: JULY 6, 2020
SCALE: 1 inch = 10 feet
DRAWN BY: SRM/RJS
FILE NAME: RAITZ_SANREPAIR_A2T2.DWG

SANITARY REPAIR PLAN

PREPARED FOR
DONALD RAITZ
PROPERTY OF
BETTY K. RAITZ, TRUSTEE
LOCATED AT
157 DOYLE ROAD, UNIT D, MONTVILLE (OAKDALE), CONNECTICUT