SELF STORAGE FACILITY

161 LEFFINGWELL ROAD

MONTVILLE, CONNECTICUT

APPROVED BY THE MONTVILLE PLANNING & ZONING COMMISSION

CHAIRMAN / SECRETARY DATE

EROSION & SEDIMENTATION CONTROL PLAN APPROVED BY THE MONTVILLE PLANNING & ZONING COMMISSION

CHAIRMAN / SECRETARY DATE

LEGEND:

	PROPERTY LINE
	EDGE OF PAVEMENT
D	DRAINAGE
W	WATER
S	SEWER
G	GAS
E	ELECTRIC
21	CONTOUR
	TREE LINE
	GUIDERAIL
	SIGNS
	CATCH BASIN
	IRON PIN, IRON PIPE
MS, CHD, MON	MERESTONE, CONNECTICUT HIGHWAY DEPARTMENT MONUMENT, MONUMENT
	FIRE HYDRANT
E	ELECTRIC MANHOLE
S	SEWER MANHOLE
	GAS GATE, WATER GATE
	EXISTING LIGHT

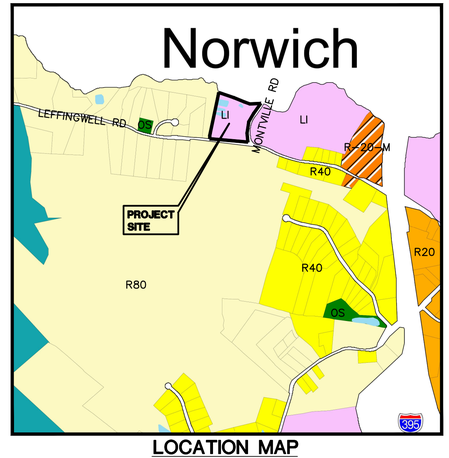

LOCATION MAP
SCALE: 1"=1000'

JULY 2020
REVISED 8/13/2020

GREEN SITE DESIGN
— LLC —
317 Main Street Norwich, Connecticut
(860) 892-1380 Fax (860) 886-9165

INDEX TO DRAWINGS

DRAWING NO.	DESCRIPTION OF DRAWINGS
1	EXISTING CONDITIONS PLAN
2	SITE PLAN
3	GRADING PLAN
4	EROSION AND SEDIMENT CONTROL PLAN
5	SEPTIC PLAN
6	SEPTIC DETAILS
7	EROSION CONTROL DETAILS

PROPOSED USE: SELF STORAGE FACILITY
OWNER: PATTERSON BROS PROPERTIES LLC
APPLICANT: DRIVEWAY GUYS

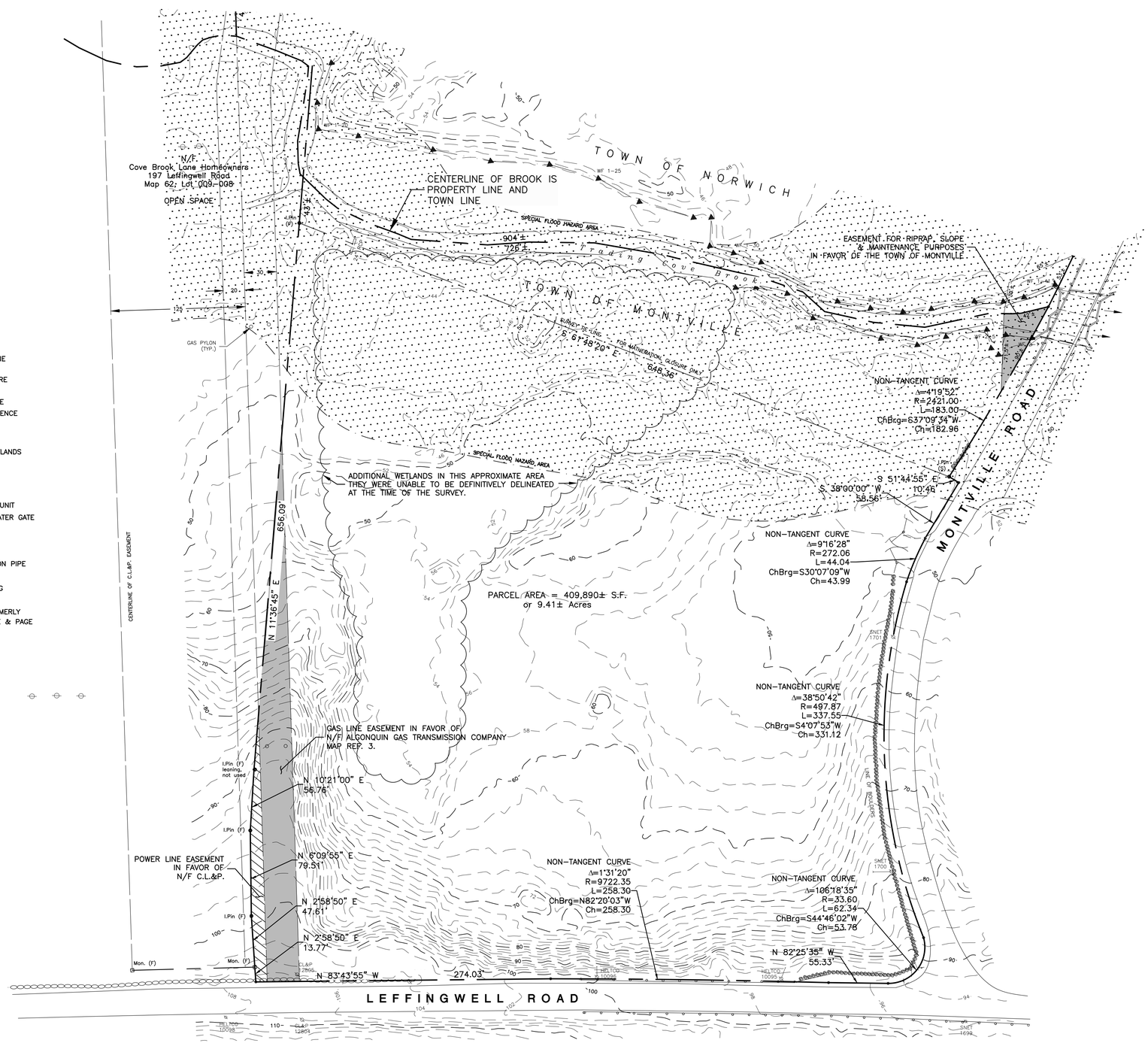

LOCATION MAP

SCALE: 1"=1000'

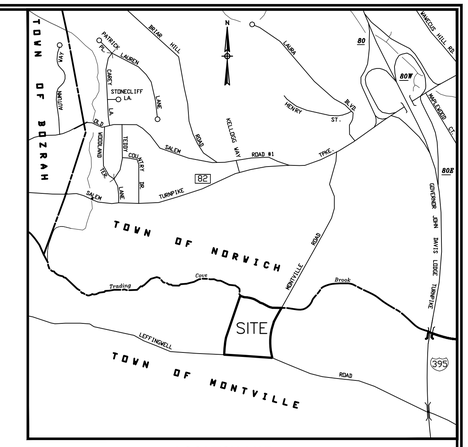

LEGEND

	PROPERTY LINE
	EASEMENT
E	OVERHEAD WIRE
G	GAS LINE
	DRAINAGE PIPE
	CHAIN LINK FENCE
	STONE WALL
	GUIDERAIL
	EDGE OF WETLANDS
	STREAM
	SIGNS
	CATCH BASIN
FEU	FLARED END UNIT
	GAS GATE, WATER GATE
	UTILITY POLE
	WELL
DH	DRILL HOLE
IPIN, IP	IRON PIN, IRON PIPE
MON	MONUMENT
	WETLAND FLAG
(F), (S)	FOUND, SET
N/F	NOW OR FORMERLY
Vol. Pg.	DEED VOLUME & PAGE

MAP REFERENCESED

1. TAKING AND EASEMENT MAP, MONTVILLE ROAD CULVERT REPLACEMENT PROPERTIES OF H. LISTER JOHNSON, TRI-J, INC., SEYMOUR ADELMAN AND THE NORWICH CEMETERY ASSOCIATION MONTVILLE ROAD, TOWNS OF MONTVILLE AND NORWICH, SCALE: 1"=20', PROJECT NO. CLA-5050, DATE: FEB. 2013, SHEET NO. 1 BY CLA ENGINEERS, INC.
2. SUBDIVISION PLAN PREPARED FOR DZIENGIEL CUSTOM BUILDERS, INC., LEFFINGWELL ROAD MONTVILLE, CONNECTICUT, BOUNDARY, DATE: 2/6/2002, SCALE: 1"=60', SHEET 1 OF 6, REVISED TO 5/13/2002 BY CME/CPK DESIGN GROUP
3. LOCATION OF ALGONQUIN GAS TRANSMISSION COMPANY RIGHT OF WAY ACROSS THE PROPERTY OF H. LISTER JOHNSON, NEW LONDON COUNTY, CONNECTICUT, YEAR: 1998, SCALE: 1"=40', DWG. CJ-P-8503, TRACT E-1-137A, BY CONKLIN & SOROKA, INC.
4. ZONING DISTRICT IP, SUBDIVISION PLAN #341 PREPARED FOR THE MUELLER GROUP, LLC SALEM TURNPIKE (ROUTE #82), NORWICH, CONNECTICUT, DATE: MARCH 17, 1997, SCALE: 1"=100' SHEET 1 OF 1, REVISED TO 29 APR. 97 BY CHANDLER, PALMER & KING
5. SURVEY MAP PROPERTY OF STUART E. GADBOIS & JUDITH S. GADBOIS PREPARED FOR JOSEPH MASTRONUNZIO, ET. AL., CONN. RT. 82 – SALEM TURNPIKE, SCALE: 1"=100'. DATE: MAY 29, 1987 REVISED TO NOV. 10, 1987 BY CHANDLER, PALMER & KING

SURVEY NOTES

1. THIS SURVEY AND MAP HAS BEEN PREPARED IN ACCORDANCE WITH SECTION 20-300b-1 THRU 20-300b-20 OF THE REGULATIONS FOR STATE AGENCIES "STANDARDS FOR SURVEYS AND MAPS IN THE STATE OF CONNECTICUT" AS ENDORSED BY THE CONNECTICUT ASSOCIATION OF LAND SURVEYORS, INC.
   - A. TYPE OF SURVEY: PERIMETER SURVEY
   - B. BOUNDARY DETERMINATION CATEGORY: RESURVEY OF WESTERLY BOUNDARY FIRST SURVEY OF REMAINDER
   - C. HORIZONTAL ACCURACY: CLASS A-2
     VERTICAL ACCURACY: N/A
     TOPOGRAPHIC ACCURACY: T-D
   - D. INTENT: TO DEPICT THE BOUNDARIES OF THE SUBJECT PARCEL
2. LATEST DATE OF FIELD WORK: 1/2/2019
3. SUBJECT PARCEL IS DEPICTED AS LOT 3 OF ASSESSOR'S MAP 62.
4. SUBJECT PARCEL IS IN ZONE DISTRICT "LI", LIGHT INDUSTRIAL.
5. WHERE THERE IS NO PHYSICAL EVIDENCE TO DETERMINE THE ROAD LINE LIMITS, THEY ARE ASSUMED TO BE AT 16.5 FEET MINIMUM FROM THE CENTER OF THE EXISTING PAVING.
6. PORTIONS OF THE SUBJECT PARCEL LIE WITHIN THE SPECIAL FLOOD HAZARD AREA AND FLOODWAY AS DEPICTED ON FEMA MAPS 09011C0213G AND 09011C0194G
7. THE LIMITS OF ALL OF THE WETLAND SOILS ON THE SUBJECT PARCEL WERE NOT ABLE TO BE DETERMINED AT THE TIME OF THE SURVEY DUE TO SEASONAL WEATHER CONDITIONS.
8. SUBSURFACE AND ENVIRONMENTAL CONDITIONS, OTHER THAN THE DELINEATED WETLANDS, WERE NOT EXAMINED OR CONSIDERED AS A PART OF THIS SURVEY.
9. CONTOURS ARE TAKEN FROM EXISTING GIS LIDAR MAPPING AND NOT FROM A FIELD SURVEY.
10. THIS SURVEY AND MAP ARE VALID ONLY IF THE PRINT OR MYLAR CONTAINS THE EMBOSSED SEAL AND LIVE SIGNATURE OF THE SURVEYOR.

50' 0' 50' 100'

SCALE: 1"=50'

TO MY KNOWLEDGE AND BELIEF THIS PLAN IS SUBSTANTIALLY CORRECT AS NOTED OR DEPICTED HEREON.

ROBERT L. MULLEN, L.L.S. #12331 DATE

No.	DATE	REVISION

CLA Engineers, Inc.
CIVIL • STRUCTURAL • SURVEYING
317 Main Street Norwich, CT 06360
(860) 886-1966 Fax (860) 886-9165

161 Leffingwell Road
Town of Montville, Connecticut

Property of Estate of H. LISTER JOHNSON

Boundary Survey

Project No. CLA-6217
Proj. Surveyor RLM
Date: 1/2/2019
Sheet No. 1

CLA

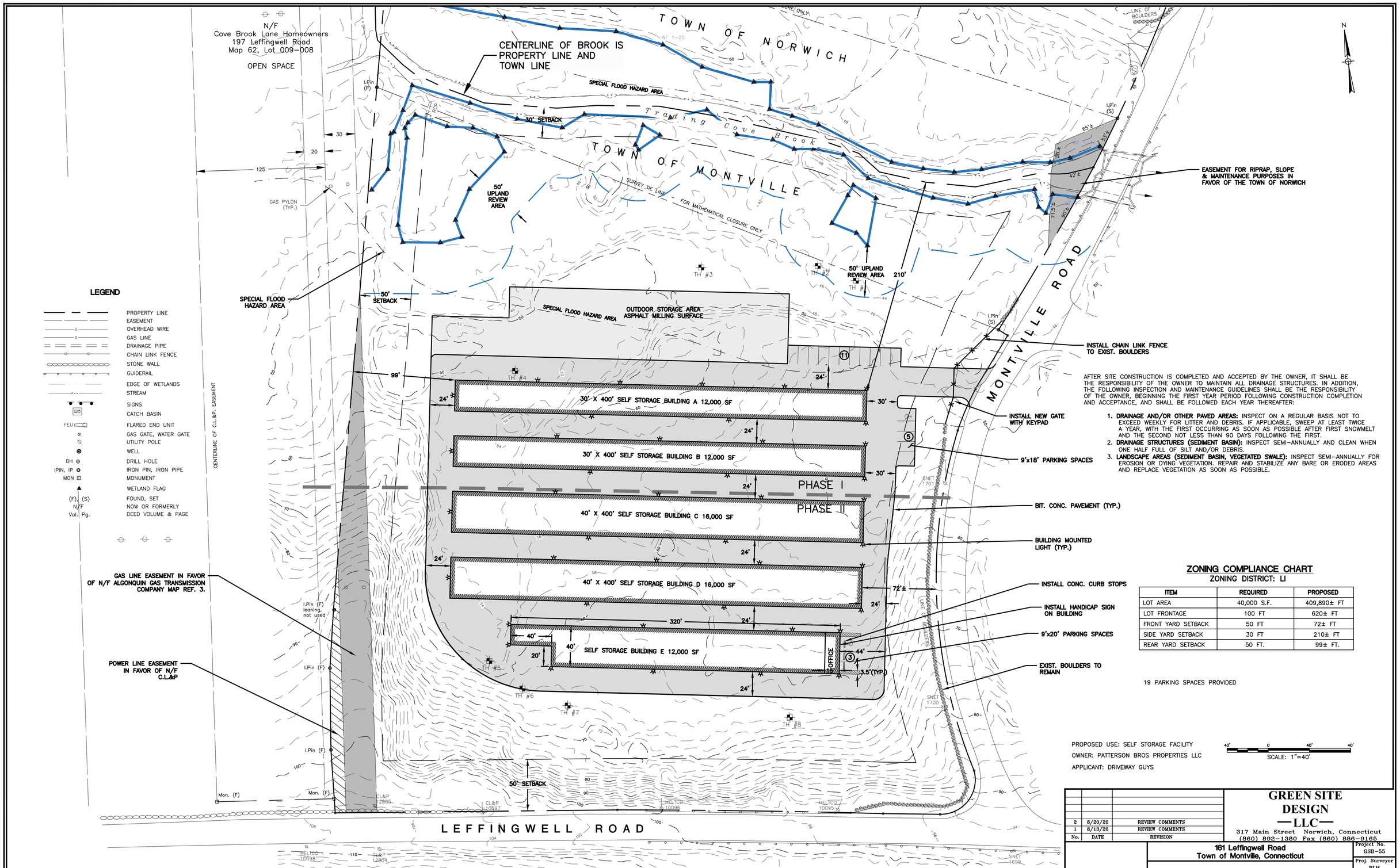

AFTER SITE CONSTRUCTION IS COMPLETED AND ACCEPTED BY THE OWNER, IT SHALL BE THE RESPONSIBILITY OF THE OWNER TO MAINTAIN ALL DRAINAGE STRUCTURES. IN ADDITION, THE FOLLOWING INSPECTION AND MAINTENANCE GUIDELINES SHALL BE THE RESPONSIBILITY OF THE OWNER, BEGINNING THE FIRST YEAR PERIOD FOLLOWING CONSTRUCTION COMPLETION AND ACCEPTANCE, AND SHALL BE FOLLOWED EACH YEAR THEREAFTER:

1. **DRAINAGE AND/OR OTHER PAVED AREAS:** INSPECT ON A REGULAR BASIS NOT TO EXCEED WEEKLY FOR LITTER AND DEBRIS. IF APPLICABLE, SWEEP AT LEAST TWICE A YEAR, WITH THE FIRST OCCURRING AS SOON AS POSSIBLE AFTER FIRST SNOWMELT AND THE SECOND NOT LESS THAN 90 DAYS FOLLOWING THE FIRST.
2. **DRAINAGE STRUCTURES (SEDIMENT BASIN):** INSPECT SEMI-ANNUALLY AND CLEAN WHEN ONE HALF FULL OF SILT AND/OR DEBRIS.
3. **LANDSCAPE AREAS (SEDIMENT BASIN, VEGETATED SWALE):** INSPECT SEMI-ANNUALLY FOR EROSION OR DYING VEGETATION. REPAIR AND STABILIZE ANY BARE OR ERODED AREAS AND REPLACE VEGETATION AS SOON AS POSSIBLE.

ZONING COMPLIANCE CHART

ZONING DISTRICT: LI

ITEM	REQUIRED	PROPOSED
LOT AREA	40,000 S.F.	409,890± FT
LOT FRONTAGE	100 FT	620± FT
FRONT YARD SETBACK	50 FT	72± FT
SIDE YARD SETBACK	30 FT	210± FT
REAR YARD SETBACK	50 FT.	99± FT.

19 PARKING SPACES PROVIDED

PROPOSED USE: SELF STORAGE FACILITY
OWNER: PATTERSON BROS PROPERTIES LLC
APPLICANT: DRIVEWAY GUYS

SCALE: 1"=40'

No.	DATE	REVISION
2	8/20/20	REVIEW COMMENTS
1	8/13/20	REVIEW COMMENTS

GREEN SITE DESIGN —LLC—
317 Main Street Norwich, Connecticut
(860) 892-1380 Fax (860) 886-9165

161 Leffingwell Road
Town of Montville, Connecticut

SELF STORAGE FACILITY

SITE PLAN

Project No. GSD-55
Proj. Surveyor RLM
Date: JULY 2020
Sheet No. 2

N/F
Cove Brook Lane Homeowners
197 Leffingwell Road
Map 62, Lot 009-008

OPEN SPACE

Trading Cove Brook

50' UPLAND REVIEW AREA

EASEMENT FOR RIPRAP, SLOPE & MAINTENANCE PURPOSES IN FAVOR OF THE TOWN OF NORWICH

FLARED END UNIT
INV=44.0

CB TYPE C-L
TF=55.3
INV=52.0

CB TYPE C-L
TF=55.3
INV=50.8

CB TYPE C-L
TF=55.3
INV=49.6

CB FINAL TYPE C-L
TO HAVE 4' SUMP WITH SNOUT
TF=54.0
INV=45.5 IN AND OUT

24" HDPE (TYP.)

BUILDING A FF=56.0

BUILDING B FF=56.0

BUILDING C FF=56.0

BUILDING D FF=56.0

BUILDING E
FF=56.0

12" HDPE (TYP.)

CB A TYPE C-L
TF=55.3
INV=48.4 W
INV=46.6 N.S.

18" HDPE (TYP.)

CB B TYPE C-L
TF=55.3
INV=48.4 W
INV=47.2 N.S.

15" HDPE (TYP.)

INSTALL WELL

CB C TYPE C-L
TF=55.3
INV=48.4 W
INV=47.8 N.S.

CB D TYPE C-L
TF=55.3
INV=48.4 W
INV=48.3 N.S.

12" HDPE (TYP.)

REMOVE BOULDERS AS NEEDED DURING GRADING ACTIVITIES. RESET ALONG TOP OF BANK AS SHOWN.

CB E TYPE C-L
TF=55.3
INV=49.6 IN AND OUT

END CURB

INSTALL 10' BENCH AT BOTTOM OF SLOPE WITH CRUSHED STONE (SEE DETAIL SHEET 6)

INSTALL 6' BENCH IN 2:1 SLOPE WITH CRUSHED STONE. (SEE DETAIL SHEET 6)

INSTALL NORTH AMERICAN GREEN S-150 ON ALL 2:1 SLOPES

INSTALL 12" CAST IRON HUBLESS PIPE ASTM A-888

END CURB

GAS LINE EASEMENT IN FAVOR OF N/F ALGONQUIN GAS TRANSMISSION COMPANY MAP REF. 3.

POWER LINE EASEMENT IN FAVOR OF N/F C.L.&P

INSTALL BITUMINOUS CONCRETE CURB

CB TYPE C-L
TF=55.3
INV=52.5

MONTVILLE ROAD

LEFFINGWELL ROAD

LINE OF BOULDERS

GAS PYLON (TYP.)

I.Pin (F)

I.Pin (S)

I.Pin (F) leaning, not used

Mon. (F)

OFFICE

SCALE: 1"=40'

LEGEND

	PROPERTY LINE
	EASEMENT
E	OVERHEAD WIRE
G	GAS LINE
	DRAINAGE PIPE
	CHAIN LINK FENCE
	STONE WALL
	GUIDERAIL
	EDGE OF WETLANDS
	STREAM
	SIGNS
	CATCH BASIN
FEU	FLARED END UNIT
	GAS GATE, WATER GATE
	UTILITY POLE
	WELL
DH	DRILL HOLE
IPIN, IP	IRON PIN, IRON PIPE
MON	MONUMENT
	WETLAND FLAG
(F), (S)	FOUND, SET
N/F	NOW OR FORMERLY
Vol. Pg.	DEED VOLUME & PAGE

No.	DATE	REVISION
3	8/20/2020	REVIEW COMMENTS
2	8/13/2020	REVIEW COMMENTS
1	7/31/2020	UNCAS COMMENTS

GREEN SITE DESIGN —LLC—
317 Main Street Norwich, Connecticut
(860) 892-1380 Fax (860) 886-9165

161 Leffingwell Road
Town of Montville, Connecticut

SELF STORAGE FACILITY

GRADING PLAN

Project No. GSD-55
Proj. Surveyor RLM
Date: JULY 2020
Sheet No. 3

CLA

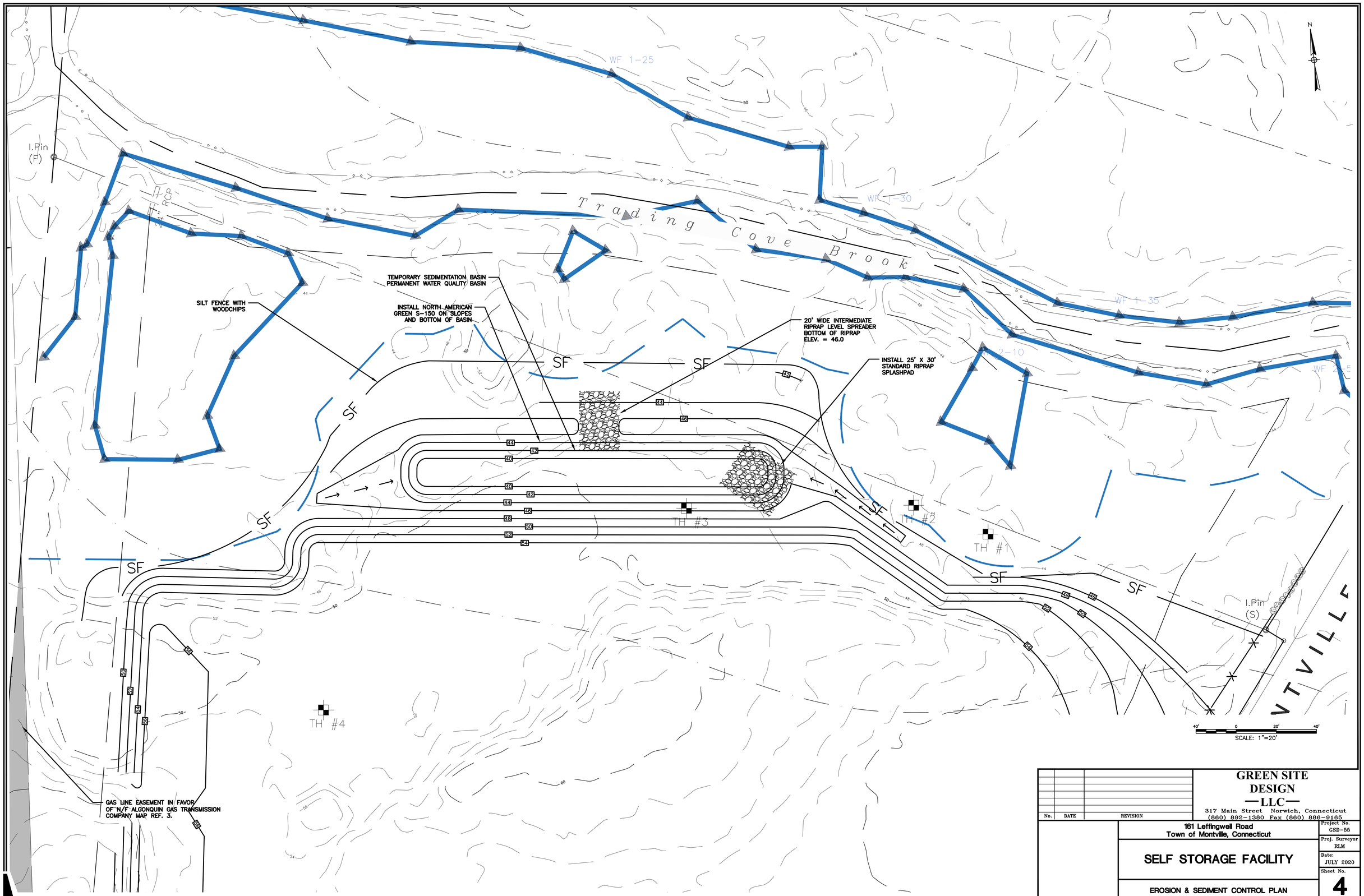

No.	DATE	REVISION

GREEN SITE DESIGN —LLC—
317 Main Street Norwich, Connecticut
(860) 892-1380 Fax (860) 886-9165

161 Leffingwell Road
Town of Montville, Connecticut

SELF STORAGE FACILITY

EROSION & SEDIMENT CONTROL PLAN

Project No. GSD-55
Proj. Surveyor RLM
Date: JULY 2020
Sheet No. 4

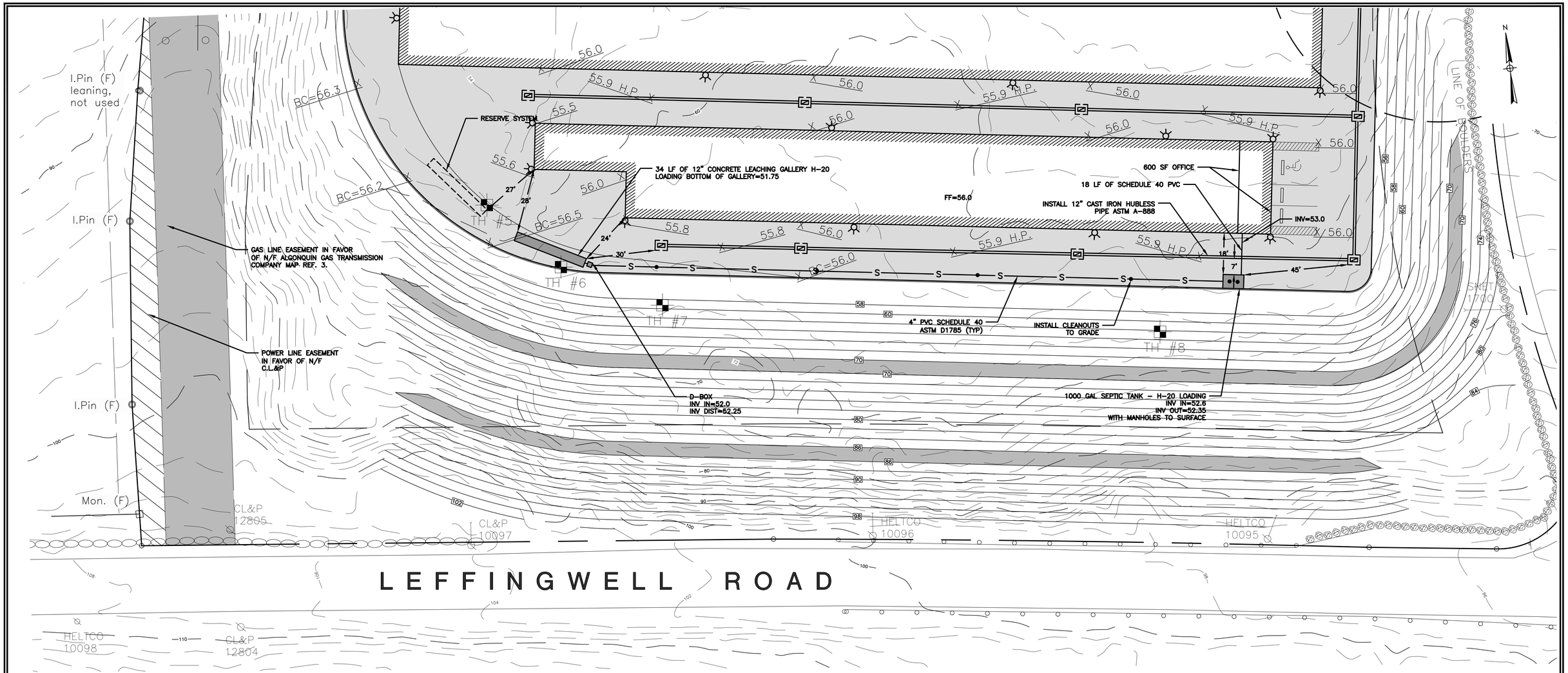

TEST HOLE DATA:

T.P. #1
0–111" FILL– MIXED BROWN SANDY LOAM, GRAVEL, CRUSHED STONE, AND BOULDERS

NO MOTTLES VISIBLE – FILL
NO LEDGE
NO WATER

T.P. #2
0–72" FILL– MIXED BROWN SANDY LOAM, GRAVEL, CRUSHED STONE, AND BOULDERS
72–114" COBBLES WITH SAND AND GRAVEL

NO MOTTLES VISIBLE – FILL
NO LEDGE
WATER AT 61"

T.P. #3
0–72" FILL– MIXED BROWN SANDY LOAM, GRAVEL, CRUSHED STONE, AND BOULDERS
72–114" COBBLES WITH SAND AND GRAVEL

NO MOTTLES VISIBLE – FILL
NO LEDGE
WATER AT 61"

T.P. #4
0–120" FILL– MIXED BROWN SANDY LOAM, GRAVEL, CRUSHED STONE, AND BOULDERS
CONCRETE FOUNDATION AT 64"

NO MOTTLES VISIBLE – FILL
NO LEDGE
WATER AT 68"

T.P. #5
TEST HOLE RE-DUG TO 156" (ELEVATION 47.0)
COBBLES AND GRAVEL, FINE SAND, BOULDERS BOTTOM 2'

NO MOTTLES VISIBLE
NO LEDGE
NO WATER

T.P. #6
TEST HOLE RE-DUG TO 240" (ELEVATION 46.0)
SAND AND GRAVEL, COBBLES, BOULDERS BOTTOM 2'

NO MOTTLES VISIBLE
NO LEDGE
NO WATER

T.P. #7
0–99" FILL– MIXED BROWN SANDY LOAM, GRAVEL, CRUSHED STONE, AND BOULDERS

NO MOTTLES VISIBLE – FILL
NO LEDGE
NO WATER

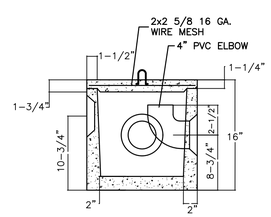

STANDARD D-BOX W/ELBOW
NOT TO SCALE

PERC TEST DATA

PERC 1:
TOTAL DEPTH – 24"
PRESOAK AT 10:12

10:30:00 – 24"
10:30:30 – 25"
10:31:00 – 26.5"
10:31:30 – 27.5"
10:32:00 – 28.5"
10:32:30 – 29"
10:33:00 – 29.5"
10:33:30 – 30"
10:34:00 – 30.5"
10:34:30 – 31"
10:35:00 – 31.5"

USE 10:31:30 TO 10:35:00
FROM 10:31:30 TO 10:35:00 – 4.0" DROP
3.5 MIN / 4.0 IN = 0.88 MIN/IN
PERC RATE = <10.1 MIN/IN

DESIGN DATA

LOT 16
PRIMARY SYSTEM:
ONLY SOUTHERLY BUILDING WILL HAVE A SMALL OFFICE & BATHROOM
PERCOLATION RATE: LESS THAN 10.1 MIN/IN (0.88 MIN/IN)
600 SF BUILDING – 60 GPD
APPLICATION RATE: 1.5 GPD / SF
REQ. EFFECTIVE LEACHING AREA=(60 GPD)/(1.5 GPD/SF)= 40 SF
USE A 12" CONCRETE GALLERY
EFFECTIVE LEACHING AREA OF TRENCH = 5.9 SF/LF
LENGTH OF TRENCH REQUIRED=(40 SF)/(5.9 SF/LF)= 7 LF
DEPTH TO RESTRICTIVE LAYER: >60"
SLOPE: 0.5%
MLSS DOES NOT NEED TO BE CONSIDERED
USE ONE ROW OF 34 LF
LEACHING AREA PROVIDED = 500.6 SF

RESERVE SYSTEM:
USE SAME DESIGN AS PRIMARY SYSTEM

40' 0 20' 40'
SCALE: 1"=20'

No.	DATE	REVISION
1	7/31/2020	UNCAS COMMENTS

GREEN SITE DESIGN —LLC—
317 Main Street Norwich, Connecticut
(860) 892-1380 Fax (860) 886-9165

161 Leffingwell Road
Town of Montville, Connecticut

SELF STORAGE FACILITY

SEPTIC PLAN

Project No. GSD-55
Proj. Surveyor RLM
Date: JULY 2020
Sheet No. 5

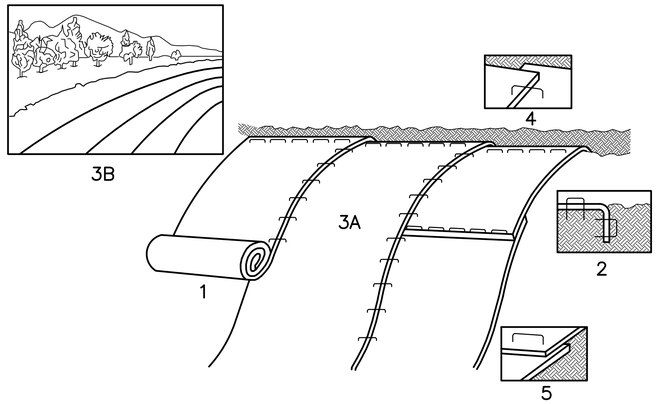

1. PREPARE SOIL BEFORE INSTALLING BLANKETS, INCLUDING APPLICATION OF LIME, FERTILIZER, AND SEED.
2. BEGIN AT THE TOP OF THE SLOPE BY ANCHORING THE BLANKET IN 6" DEEP x 6" WIDE TRENCH, BACKFILL AND COMPACT THE TRENCH AFTER STAPLING.
3. ROLL THE BLANKET (A) DOWN OR (B) HORIZONTALLY ACROSS THE SLOPE.
4. THE EDGES OF PARALLEL BLANKETS MUST BE STAPLED WITH APPROXIMATELY 2" OVERLAP.
5. WHEN BLANKETS MUST BE SPLICED DOWN THE SLOPE, PLACE BLANKETS END OVER END (SHINGLE STYLE) WITH APPROXIMATELY 4" OVERLAP. STAPLE THROUGH OVERLAPPED AREA, APPROXIMATELY 12" APART.

NOTE: ALL PERMANENT EROSION CONTROL BLANKETS ARE TO BE SYNTHETIC INDUSTRIES "PYRAMAT" OR "LANDLOK TRM 450". ALL TEMP EROSION CONTROL BLANKETS CAN BE JUTE MESH OR EQUAL BIODEGRADABLE MATERIAL. SEE PLANS FOR LOCATIONS OF EACH TYPE TO BE USED AND FINAL DETERMINATION OF WHETHER PERMANENT OR TEMP BLANKETS SHALL BE INSTALLED WILL DEPEND ON THE NATURE AND CHARACTER OF EXPOSED SOIL @ SLOPE SURFACE.

SLOPE STABILIZATION DETAIL

NOT TO SCALE

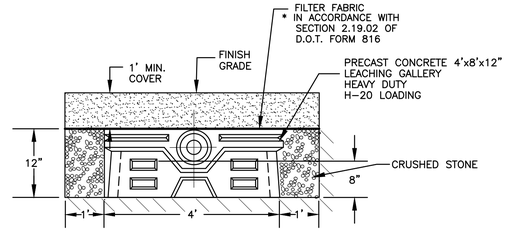

TYPICAL 12" CONCRETE GALLERY TRENCH (SEPTIC SYSTEM)

NOT TO SCALE

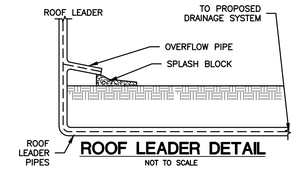

ROOF LEADER DETAIL

NOT TO SCALE

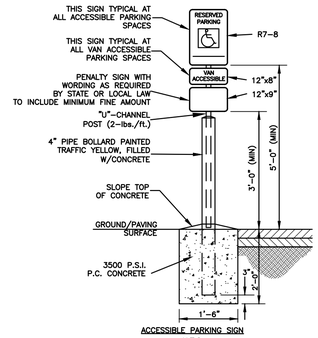

VAN ACCESSIBLE PARKING SIGN

NOT TO SCALE

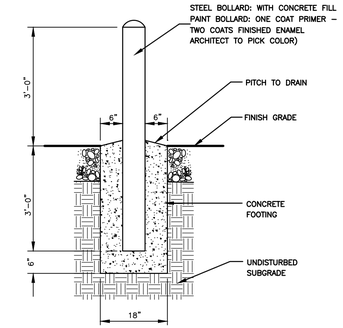

BOLLARD DETAIL

NOT TO SCALE

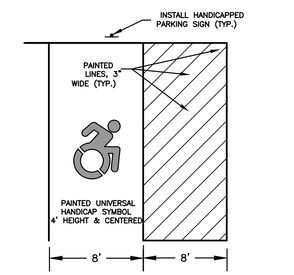

TYPICAL HANDICAP VAN PARKING SPACE

NOT TO SCALE

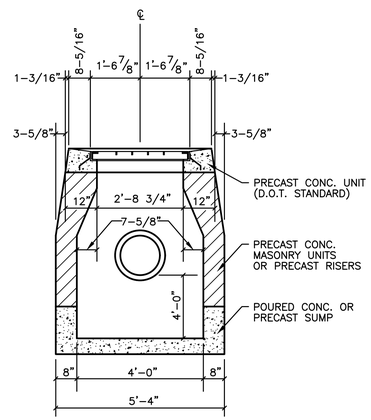

FRONT ELEVATION

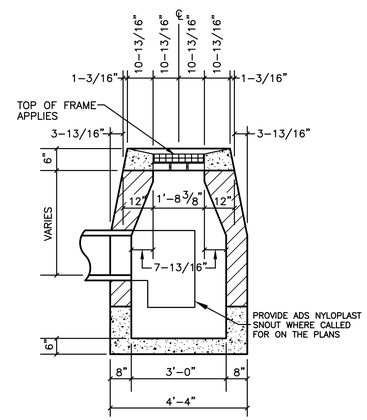

SIDE ELEVATION

FINAL TYPE "C-L" CATCH BASIN W/SNOUT DETAIL

NOT TO SCALE

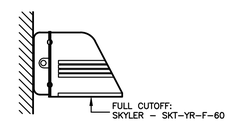

WALLPACK

NOT TO SCALE

LIGHTING STANDARD

SELECT FILL

SELECT FILL PLACED WITHIN AND ADJACENT TO LEACHING SYSTEM AREAS SHALL BE COMPRISED OF CLEAN SAND, OR SAND AND GRAVEL, FREE FROM ORGANIC MATTER AND FOREIGN SUBSTANCES. THE SELECT FILL SHALL MEET THE FOLLOWING REQUIREMENTS UNLESS OTHERWISE APPROVED BY THE DESIGN ENGINEER. SELECT FILL EXCEEDING 6% PASSING THE #200 SLEVE BASED ON A WET SIEVE TEST CANNOT BE APPROVED BY THE DESIGN ENGINEER.

1. THE SELECT FILL SHALL NOT CONTAIN ANY MATERIAL LARGER THEN THREE (3) INCH SIEVE.
2. UP TO 45% OF THE DRY WEIGHT OF THE REPRESENTIATIVE SAMPLE MAY BE RETAINED ON THE #4 SIEVE. NOTE: THIS IS THE GRAVEL PORTION OF THE SAMPLE.
3. THE MATERIAL THAT PASSES THE #4 SIEVE IS THEN REWEIGHED AND THE SIEVE ANALYSIS STARTED.
4. THE REMAINING SAMPLE SHALL MEET THE FOLLOWING GRADATION CRITERIA.

SIEVE SIZE	PERCENT PASSING	
	WET SIEVE	DRY SIEVE
#4	100	100
#10	70–100	70–100
#40	10–50	10–75
#100	0–20	0–5
#200	0–5	0–2.5

PERCENT PASSING THE #40 SIEVE CAN BE INCREASED TO NO GREATER THEN 75% IF THE PERCENT PASSING THE #100 SIEVE DOES NOT EXCEED 10% AND THE #200 SIEVE DOES NOT EXCEED 5%. THE SELECT FILL MUST BE TESTED AFTER PLACEMENT AND MUST HAVE A PERCOLATION RATE AT LEAST AS FAST AS THE DESIGN RATE OF LESS THAN 10 MIN/INCH

SEPTIC SYSTEM NOTES:

1. A PRIOR TO THE START OF CONSTRUCTION, THE BUILDING & SYSTEM ARE TO BE STAKED BY A LICENSE SURVEYOR. A BENCHMARK MUST BE SET & NOTED ON THE PLAN PRIOR TO START OF CONSTRUCTION.
2. BENCH MARK TO BE PROVIDED IN THE AREA OF THE SYSTEM PRIOR TO CONSTRUCTION.
3. THE UTILITY TRENCHES ARE TO BE INSPECTED PRIOR TO BEING BACKFILLED. (INCLUDING SEPTIC, WATER, DRAINAGE, AND ELECTRIC)
4. TEST HOLES WILL BE REQUIRED AT THE PRIMARY & RESERVE AREAS TO A DEPTH OF ELEV. 45 PRIOR TO THE ISSUANCE OF A PERMIT.
5. THE BATHROOMS ARE FOR EMPLOYEES ONLY.

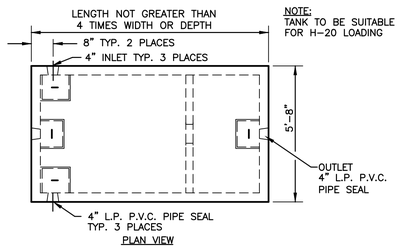

PLAN VIEW

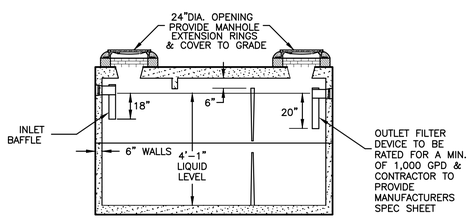

CROSS SECTION VIEW

1,000 GALLON SEPTIC TANK

NOT TO SCALE

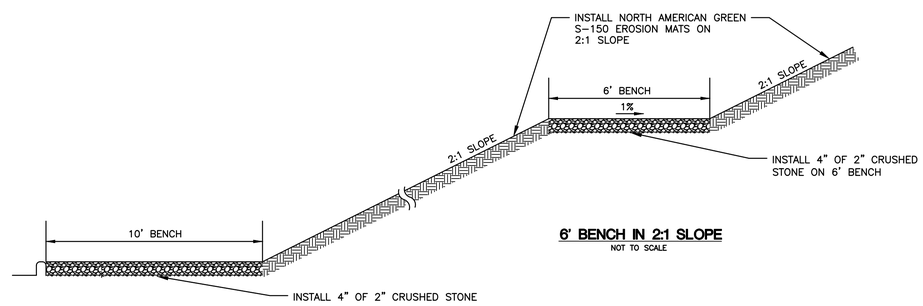

6' BENCH IN 2:1 SLOPE

NOT TO SCALE

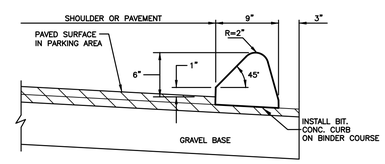

BITUMINOUS CONCRETE PAVEMENT & LIP CURBING

NOT TO SCALE

No.	Date	Revision
1	8/13/20	REVIEW COMMENTS

GREEN SITE DESIGN —LLC—
317 Main Street Norwich, Connecticut
(860) 892-1380 Fax (860) 886-9165

161 Leffingwell Road
Town of Montville, Connecticut

SELF STORAGE FACILITY

SEPTIC DETAILS

Project No. GSD-55
Proj. Engineer E.M.B.
Date: JULY 2020
Sheet No. 6

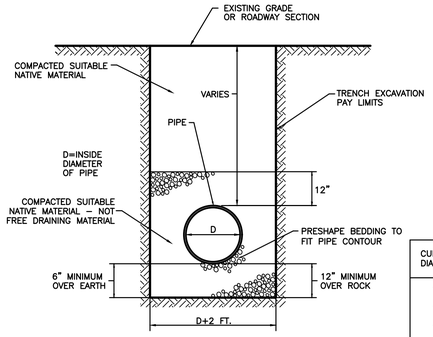

TYP. DRAINAGE TRENCH DETAIL

NOT TO SCALE

CULVERT DIAMETER	MAXIMUM TRENCH WIDTH
12"	3'–0" (MIN.)
15"	3'–3"
18"	3'–6"
24"	4'–0"

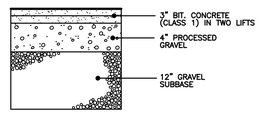

PAVING SECTION

NOT TO SCALE

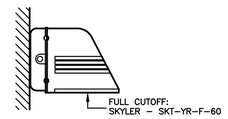

WALLPACK

NOT TO SCALE

LIGHTING STANDARD

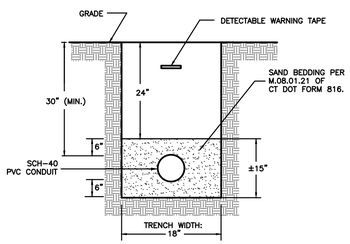

NOTES:
1. ALL EXCAVATIONS MUST MEET OSHA STANDARDS.
4. CONTRACTOR TO PROVIDE COMPACTION ON ALL TRENCH BACKFILLS, EXCAVATIONS AND PAVEMENT BASES TO NOT LESS THAN 95% OF THE DRY DENSITY FOR THAT MATERIAL.
5. MAINTAIN 2" SEPARATION BETWEEN MULTIPLE CONDUIT TRENCHES

CONDUIT TRENCH DETAIL

NOT TO SCALE

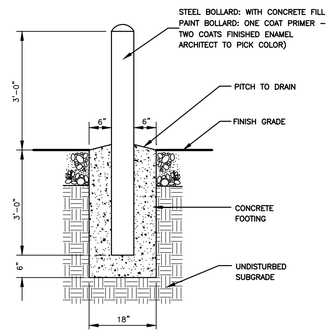

BOLLARD DETAIL

NOT TO SCALE

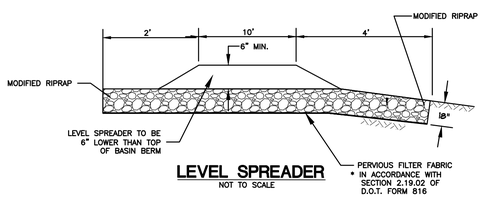

LEVEL SPREADER

NOT TO SCALE

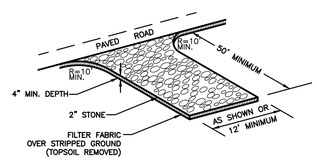

CONSTRUCTION ENTRANCE

NOT TO SCALE

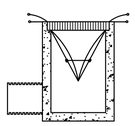

INSTALLATION DETAIL

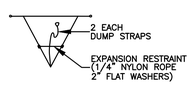

BAG DETAIL

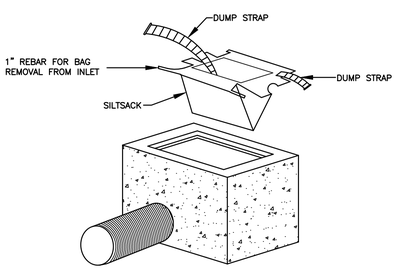

INLET SEDIMENT CONTROL DEVICE DETAIL

NOT TO SCALE

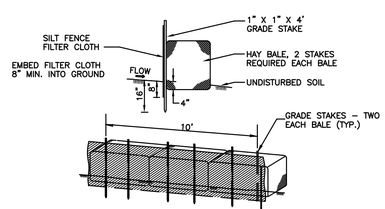

HAY-BALE / SILT FENCE EROSION PROTECTION

NOT TO SCALE

CONSTRUCTION NOTES:

1. SILT FENCE FILTER CLOTH TO BE SECURELY FASTENED TO GRADE STAKE WITH STAPLES, 6" ON CENTER.
2. WHEN TWO SECTIONS OF FILTER CLOTH ADJOIN ONE ANOTHER THEY SHALL OVERLAP BY 6" AND BE FOLDED.
3. BALES SHALL BE PLACED IN A ROW WITH ENDS TIGHTLY ABUTTING THE ADJACENT BALES.

EROSION CONTROL & SEDIMENTATION NARRATIVE

1. PRIOR TO THE INSTALLATION OF ANY EROSION AND SEDIMENT CONTROL MEASURES, THE OWNER AND CONTRACTOR SHALL MEET WITH THE TOWN OF MONTVILLE ZONING/WETLANDS OFFICE.
2. THE EROSION AND SEDIMENT CONTROL MEASURES SHALL BE INSTALLED PRIOR TO SITE DISTURBANCE AS SHOWN ON SHEET 3, ADDITIONAL EROSION & SEDIMENT CONTROL MEASURES SHALL BE INSTALLED IF DETERMINED NECESSARY BY THE ZONING/WETLANDS OFFICER.
3. THE CONTRACTOR SHALL CONTACT THE ZONING/WETLANDS OFFICER FOR INSPECTION OF THE SEDIMENT AND EROSION CONTROL MEASURES, PRIOR TO SITE DISTURBANCE. CONSTRUCTION SHALL NOT BEGIN UNTIL SUCH TIME AS THE ZONING/WETLANDS OFFICER HAS REVIEWED AND APPROVED THE INSTALLATION OF THE SEDIMENTATION AND EROSION CONTROL MEASURES.
4. CONTRACTOR TO INSPECT ALL EROSION AND SEDIMENT CONTROL MEASURES AT LEAST WEEKLY AND AFTER EVERY STORM EVENT AND REPAIR AND MAINTAIN AS NECESSARY.
5. INSTALLATION OF THE TEMPORARY SEDIMENT TRAP PRIOR TO THE START OF PHASE I CONSTRUCTION, AND SHALL BE INSPECTED AT LEAST WEEKLY AND AFTER EVERY STORM EVENT AND BE CLEANED & MAINTAINED THROUGH PHASE II AS NECESSARY.
6. CLEARING AND GRUBBING OF THE AREA TO BE GRADED. AND REMOVE ALL PADS OR STRUCTURES STORED ON THE SITE.
7. STAKED HAY BALE SILT BARRIERS OR SILT FENCE SHALL BE INSTALLED AROUND ANY TEMPORARY STOCKPILE AREAS. ALL STOCKPILE AREAS ARE TO BE OUTSIDE OF THE 75' WELL RADIUS.
8. ROUGH GRADE THE SITE.
9. CONSTRUCT PHASE I BUILDINGS.
10. INSTALL BITUMINOUS PAVEMENT SURROUNDING THE PHASE I BUILDINGS
11. INSTALL LOAM & SEED SURROUNDING AND OVER THE PHASE 2 BUILDINGS UNTIL BUILT.
12. FOR ALL PHASES: TOPSOIL SHALL BE RE–APPLIED TO PROVIDE A MINIMUM DEPTH OF FOUR INCHES.
13. FOR ALL PHASES: ALL DISTURBED AREAS SHALL BE SEEDED AND MULCHED. ALL EROSION AND SEDIMENTATION CONTROL MEASURES SHALL REMAIN IN PLACE UNTIL VEGETATION IS RE–ESTABLISHED.
14. FOR ALL PHASES: SEEDING SHOULD TAKE PLACE BETWEEN APRIL 1 & JUNE 1 OR AUGUST 15 & OCTOBER 1.
15. THE FOLLOWING SEEDING MIXTURES SHALL BE PROVIDED ON ALL DISTURBED AREAS:

KENTUCKY BLUE GRASS	20 LB's/AC
CREEPING RED FESCUE	20 LB's/AC
PERENNIAL RYEGRASS	5 LB's/AC

16. UNFORESEEN PROBLEMS WHICH ARE ENCOUNTERED IN THE FIELD SHALL BE SOLVED ACCORDING TO CONNECTICUT GUIDELINES FOR SOIL EROSION AND SEDIMENT CONTROL.

POLLUTION PREVENTION PLAN

1. A PORTION OF THIS SITE IS LOCATED IN THE LAKE KONOMOC DRAINAGE BASE, DUE TO THE SENSITIVE NATURE OF THE AREA, DEP MUST BE NOTIFIED IMMEDIATELY OF ANY SPILLS OR ACCIDENTAL DISCHARGE. (860) 424–3338.
2. POLLUTION PREVENTION TEAM
   THE OWNERS WILL BE RESPONSIBLE FOR CARRYING OUT THE PROVISIONS OF THIS PLAN.
3. SWEEPING
   PARKING LOTS, SIDEWALKS AND OTHER IMPERVIOUS SURFACES SHALL BE SWEPT CLEAN OF SAND AND LITTER AND ANY OTHER POLLUTANTS AT LEAST TWICE A YEAR.
   A. BETWEEN NOVEMBER 15 AND DECEMBER 15 (AFTER LEAF FALL)
   B. DURING APRIL (AFTER SNOW MELT)
4. WASHING
   NO WASHING VEHICLES OR EQUIPMENT.
5. MAINTENANCE AND INSPECTION
   A. MONTHLY INSPECTION OF STORM WATER STRUCTURES AND OUTFALLS.
   B. CLEAN SEDIMENT AND DEBRIS FROM STRUCTURES AND OUTFALLS ONCE A YEAR DURING APRIL.
6. SPILL OR ACCIDENTAL DISCHARGE
   COMPLY WITH STATE AND FEDERAL REGULATIONS TO CONTAIN AND CLEAN UP ANY SPILL OR DISCHARGE AND DISPOSE OF MATERIALS AT AN APPROVED FACILITY.

   CONTACT CONNECTICUT DEP OIL AND CHEMICAL SPILL RESPONSE DIVISION (860) 424–3338

   IN THE EVENT A SPILL OCCURS THE FOLLOWING STEPS SHOULD BE PERFORMED AS SOON AS POSSIBLE:
   A. STOP THE SOURCE OF THE SPILL
   B. CONTAIN THE SPILL
   C. COVER SPILL WITH ABSORBENT MATERIAL SUCH AS KITTY LITER, SAWDUST OR OIL ABSORBENT PADS. DO NOT USE STRAW.
   D. DISPOSE OF ABSORBER IN ACCORDANCE WITH LOCAL AND STATE REGULATIONS.
7. DUST CONTROL
   DUST CONTROL OF ALL EXPOSED EARTH PRODUCTS WILL BE CONTROLLED BY SPRAYING THE SURFACE WITH WATER.
8. THE OWNERS SHALL SUBMIT A WRITTEN REPORT TO THE TOWN ANNUALLY FOR THE INSPECTIONS REQUIRED FOR THE MAINTENANCE AND INSPECTION UNDER NOTE 5.
9. BEST MANAGEMENT PRACTICES FOR FUTURE UPKEEP OF THE SITE WILL INCLUDE NON–CHEMICAL LAWN CARE & MINIMAL USE OF FERTILIZERS, DE–ICING OR WINTER OPERATIONS WITHOUT THE USE OF CALCIUM, AND NO EXTERIOR WASHING OF VEHICLES OR DISCHARGING OF INTERIOR WASH WATER. THE WASH AREA WITHIN THE BUILDING WILL HAVE A 100% RECYCLED SYSTEM WITH NO DISCHARGE.

No.	Date	Revision
1	8/13/20	REVIEW COMMENTS

GREEN SITE DESIGN —LLC—
317 Main Street Norwich, Connecticut
(860) 892–1380 Fax (860) 886–9165

161 Leffingwell Road
Town of Montville, Connecticut

SELF STORAGE FACILITY

EROSION & SEDIMENT CONTROL DETAILS

Project No. GSD–55
Proj. Engineer E.M.B.
Date: JULY 2020
Sheet No. 7